RCSL CORROSION MONITORING

A DIVISION OF BAC® CORROSION CONTROL

Member of MIDROC

Internal Corrosion Monitoring and Chemical Injection Specialists

PRODUCT CATALOGUE

2019

Contents Page

A DIVISION OF BAC CORROSION CONTROL

RCSL (A TRADING DIVISION OF BAC CORROSION CONTROL LTD)
STAFFORD PARK 11, TELFORD, SHROPSHIRE, TF3 3AY
T : +44 (0) 1952 290321 E : sales@rcslgroup.com W: www.rcslgroup.com

MEMBER OF MIDROC EUROPE

1.0
Access Systems & Accessories

Sub-Section No.

1.1
Triseal® Two Inch System Retrievable Access Fitting Assembly

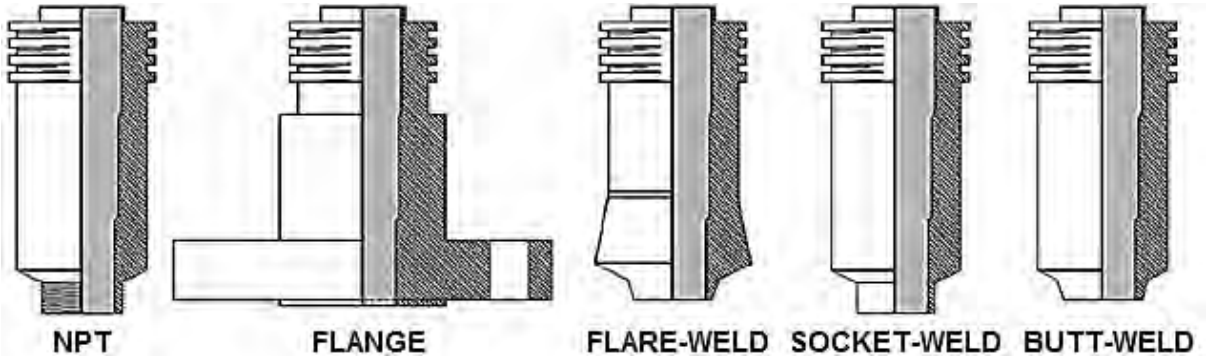

The TRISEAL®* Two Inch System makes it possible to insert and retrieve a complete range of corrosion monitoring, erosion monitoring, biomonitoring, hydrogen monitoring, chemical injection and sampling system probes, quills and nozzles whilst the operating system, vessel or pipeline remains operational and at full operational pressure.

A comprehensive range of access fitting assemblies are available in a wide range of styles and materials.

The Two Inch System Access Fitting Assemblies consist of:

1. The Access Fitting Body.
2. A Solid or Hollow Plug
3. A Thread Protecting Cover (Optional)

The Design of the Access Fitting Bodies conforms with the below listed standards and codes:

- ASME B31.3
- API RP 14E
- ASME/ANSI B16.5
- NACE MR-0175

All components of the TRISEAL* System Two Inch System are interchangeable with existing 2 inch high pressure access systems from other manufacturers following industry standard design.

*TRISEAL is a Registered Trade Mark of RCSL Corrosion Monitoring

A DIVISION OF BAC CORROSION CONTROL
RCSL (A TRADING DIVISION OF BAC CORROSION CONTROL LTD)
STAFFORD PARK 11, TELFORD, SHROPSHIRE, TF3 3AY
T : +44 (0) 1952 290321 E : sales@rcslgroup.com W: www.rcslgroup.com
MEMBER OF MIDROC EUROPE

1.1
Triseal® Two Inch System Retrievable Access Fitting Assembly

Triseal Access Fitting Assembly Ordering Product Code Generation

MOUNTING TYPE
1. – Flare-weld
2. – Butt-weld
3. – 2" Socket-weld
4. – 2" NPT
5. – ANSI Flange RJ
6. – ANSI Flange RF
7. – API Flange
8. – ANSI Flange FF
9. – Other (Please Specify)

TEE OPTIONS

Digit 1
0. – NON TEE
1. – ¼" TEE
2. – ½" TEE
3. – ¾" TEE
4. – 1" TEE
5. – 150# RF
6. – 300# RF
7. – 400/600# RF
8. – 900/1500# RF
9. – 2500# RF
A. – 150# RJ
B. – 300# RJ
C. – 400/600# RJ
D. – 900/1500# RJ
E. – 2500# RJ
F. – 2" 2500# RJ
G – API 2000#
H – API 3/5000#
I – API 10000#
Z. Other (Please Specify)

Digit 2
o. – NON TEE
a. – Drilled Tee
b. – NPT Tee
c. – Socket-weld Tee
d. – ½" flange and bore
e. – ¾" flange and bore
f. – 1" flange and bore
g. – 2" flange (1" bore)
z. – Other (Please Specify)

BODY STYLE

2" SOCKET WELD
0. – N/A

2" NPT
0. – N/A

BUTT-WELD
Base Profile
1. – 2"
2. – 3"

FLARE-WELD
Base Profile
3. – 4"
4. – 6"
5. – 8" – 10"
6. – 12" – 18"
7. – 20" – 36"
8. – FLAT

ANSI Flange Rating
1. – 150#
2. – 300#
3. – 4/600#
4. – 9/1500#
5. – 2500#

API Flange Rating
1. – 2000#
2. – 3/5000#
3. – 10000#

BODY MATERIAL
1. – AISI 1022 CARBON STEEL
2. – ASTM A105 CARBON STEEL
3. – ASTM A350 LF2 CARBON STEEL
4. – 316 S/S
5. – DUPLEX S/S (Please Specify)
6. – SUPER DUPLEX (Please Specify)
7. – ASTM A694 F65
8. – 304 S/S
9. – ASTM B381
A. – ASTM B348
B. – A350LF2 GR LCB
C. – UNS N06625
D. – UNS N08825
E. – A216 GR WCB
F. – 321 SS
G. – Ti GR2
H. – Hastelloy C276
J. – A182-F44
K. – 410 St St
L. – UNS S31803 / S32205 DSS
M. – UNS S32750 SDSS
N. – UNS S32760 SDSS
O. – ASTM A694 F60
Z. – Other (Please Specify)

PRODUCT CODE: TS X – Xx – X X – X X X – X X – X

PLUG TYPE
0. – NOT REQ'D
1. – SOLID
2. - HOLLOW

PLUG MATERIAL
0. – NOT REQD
1. – 316 S/S
2. – 316L S/S
3. – C276
4. – UNS S21800
5. – CS
6. – UNS S31803
7. – UNS N06625
8. – UNS N08825
9. – Ti
A. – F44
B. – UNS S32750
C. – UNS S32760
D. – A105
E. – A350LF2
F. – 321 S/S
Z. – OTHER (Please Specify)

Note: Option 4 has 316 S/S trim

PLUG SEALS
0. – NOT REQUIRED
1. – VITON O-RING, PTFE PRIM PKG
2. – ETHYLENE PROPYLENE O-RING, VESPEL PRIM PKG
3. – KALREZ O-RING, VESPEL PRIM PKG
4. – NO O-RING, UNS S21800 PKG
5. – HYDRIN O-RING, PTFE PKG
6. – OTHER (PLEASE SPECIFY)
7. – PTFE PROBE SEAL, PTFE PRIM PKG – Hollow Plug Only
8. – AED HNBR O-RING, (PLEASE SPECIFY), PTFE PRIM PKG
9. – PEEK PROBE SEAL, PEEK PRIM PKG – Hollow Plug Only
A. – AF69/90 O-RING, PTFE PRIM PKG
B. – NITRILE O-RING, PEEK PRIM PKG
C. – FR 25/90 O-RING, PTFE PRIM PKG
D. – HNBR ELASTOLION 101 (RGD) O-RING, PEEK PRIM PKG
E. – KALREZ O-RING, PTFE PRIM PKG
F. – FR 58/90 (VITON B) AED O-RING, PTFE PRIM PKG
G. – VITON AED O-RING, PEEK PRIM PKG
H. – AFTLAS O-RING, PEEK PRIM PKG
I. – VITON AED O-RING, PTFE PRIM PKG
J. – ETHYLENE PROPYLENE (EDPM) O-RING, PTFE PRIM PKG
K. – NITRILE O-RING, PTFE PRIM PKG
L. – HNBR ELASTOLION 985 O-RING, PEEK PRIM PKG
M. – VERMILION® FOUR O-RING, PTFE PRIM PKG
N. – ELAST-O-LION 985 O-RING, PTFE PRIM PKG
O. – ELAST-O-LION 101 O-RING, PTFE PRIM PKG
Note: Hollow plug can only have options 0, 6, 7 or 9.

PLUG ASSEMBLY OPTIONS

COVER TYPE
0. – NOT REQUIRED
1. – HEAVY COVER W/O HOLE
2. – HEAVY COVER W/HOLE
3. – POLYCARBONATE COVER W/O HOLE
4. – POLYCARBONATE COVER W/HOLE
5. – 4000 PSI RATED COVER W/BLEED VALVE
6. – 4000 PSI RATED COVER W/BLEED VALVE & PRESSURE GAUGE
7. – 4000 PSI RATED COVER W ½" NPT HOLE
8. – 4000 PSI RATED COVER W/BLEED VALVE, PRESSURE GAUGE & ½" NPT HOLE
9. – 4000 PSI RATED COVER PLAIN
A. – 4000 PSI RATED COVER W ½" NPT HOLE AND BLEED VALVE
B. – COVER FOR USE WITH HYDROGEN PROBES
C. – NYLON COVER W/O HOLE
D. – NYLON COVER W/HOLE
E. – HEAVY COVER W/½" NPT HOLE
Z. – OTHER (Please Specify)

COVER MATERIAL
0. – NOT REQUIRED
1. – 1022 CS
2. – 316 SS
3. – UNS S31803
4. – A105 / A350LF2
5. – TITANIUM
6. – A694
7. – A182·F44
8. – AISI4140 / EN19T / 708M40T
9. – UNS S32760
A. – POLYCARBONATE
B. – NYLON
C. – UNS N06625
D. – UNS N08825
E. – 321 S/S
F. – UNS S32750
Z. – OTHER (Please Specify)

COVER OPTIONS

COATING
0. – NO COATING
1. – STD COATING
2. – OTHER (Please Specify)

Note: Standard Coating is only suitable for carbon steel.

COATING OPTIONS

Examples

1. To order an Access Fitting Body only, please generate the Product Code as per the below example.
   Example: 2" 4/600# ANSI RTJ Access Fitting, ¼ inch NPT tee, Duplex SS, without coating = Product Code: TS51b35-000-00-0.

2. To order a Body with a Plug Assembly, please generate the Product Code as per the below example.
   Example: Flare-weld access fitting, ¾ inch drilled tee, for pipeline size of 4 inch, ASTM A105 Carbon Steel, with 316 S/S Solid Plug, Viton O-Ring and PTFE Primary Packing, without coating = Product Code: TS13a32-111-00-0.

3. To order a Body with a Plug Assembly and a Cover, please generate the Product Code as per the below example.
   Example: Flare-weld Access Fitting, non-tee, flat base profile, ASTM A105 Carbon Steel, with 316 S/S Solid Plug, Viton O-Ring and PTFE Primary Packing, Heavy Cover without hole in AISI 1022 CS, RCSL standard coating = Product Code TS10o82-111-11-1

A DIVISION OF BAC CORROSION CONTROL
RCSL (A TRADING DIVISION OF BAC CORROSION CONTROL LTD)
STAFFORD PARK 11, TELFORD, SHROPSHIRE, TF3 3AY
T : +44 (0) 1952 290321 E : sales@rcslgroup.com W: www.rcslgroup.com
MEMBER OF MIDROC EUROPE

1.2
Triseal® Two Inch System Retrievable Non-Tee Type Access Fittings

Direct Type Access Fittings

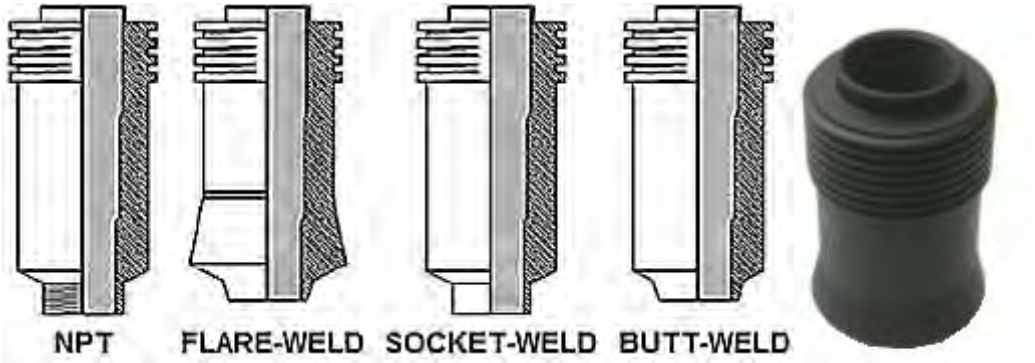

Model	Height	Weight
Flare-weld	13.335cm (5.25”)	2.5 Kg (5.5 lb.)
Butt-weld	13.335cm (5.25”)	2.5 Kg (5.5 lb.)
Socket-weld	15.875cm (6.25”)	2.05 Kg (4.5 lb.)
NPT	15.875cm (6.25”)	2.05 Kg (4.5 lb.)

Flanged Type Access Fittings

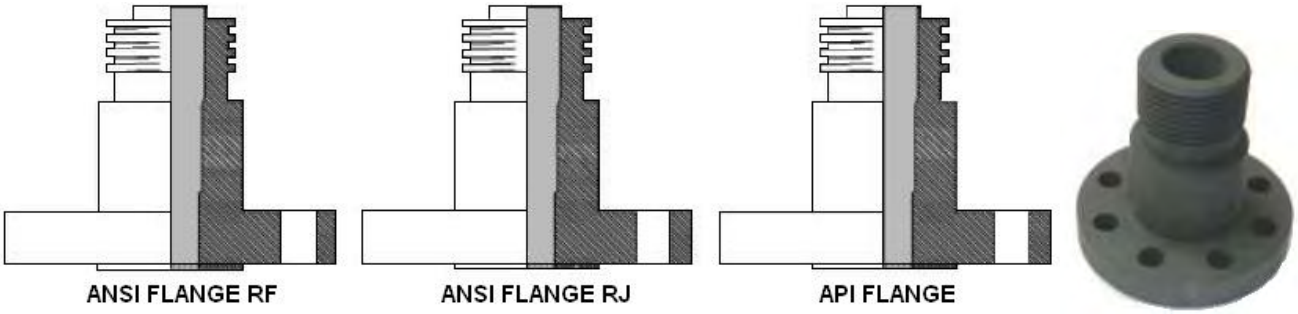

Flange Size	Height	Weight
150	13.335cm (5.25”)	4.76 Kg (10.5 lb.)
300	13.335cm (5.25”)	5.22 Kg (11.5 lb.)
4/600	15.875cm (6.25”)	6.92 Kg (15.25 lb.)
9/1500	15.875cm (6.25”)	13.95 Kg (30.75 lb.)
2.500	15.875cm (6.25”)	18.15 Kg (40 lb.)

Temperature Rating: -28.9°C (-20°F) to +176°C (+350°F.)

Pressure Rating: 6000psi (410 bar) or as Flange Size

A DIVISION OF BAC CORROSION CONTROL
RCSL (A TRADING DIVISION OF BAC CORROSION CONTROL LTD)
STAFFORD PARK 11, TELFORD, SHROPSHIRE, TF3 3AY
T : +44 (0) 1952 290321 E : sales@rcslgroup.com W: www.rcslgroup.com
MEMBER OF MIDROC EUROPE

1.3
Triseal® Two Inch System Retrievable Tee Type Access Fittings

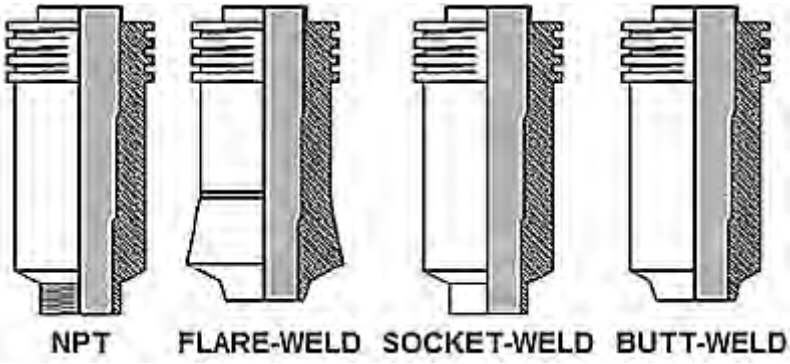

0.25 inch Tee		0.5 inch Tee		0.75 inch Tee		1 inch Tee	
Height (ins)	Weight (lbs)	Height (ins)	Weight (lbs)	Height (ins)	Weight (lbs)	Height (ins)	Weight (lbs)
5.25	4.5	6.25	5.75	6.25	6.5	7.25	7

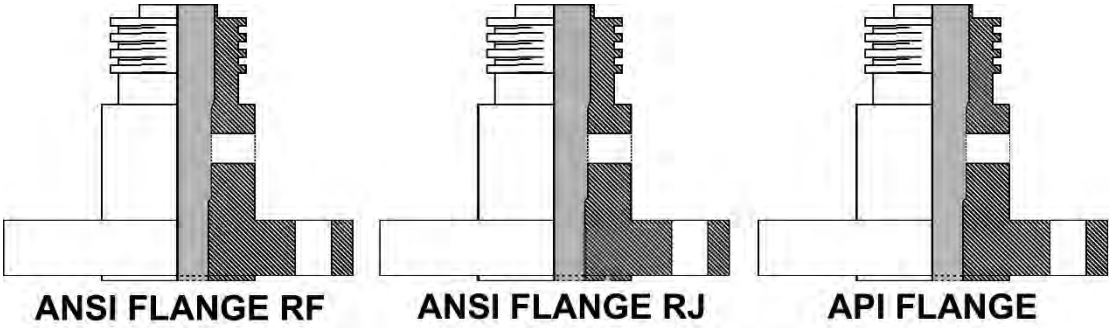

		0.25 inch Tee		0.5 inch Tee		0.75 inch Tee		1 inch Tee	
Model	Flange Size	Height (inch)	Weight (lbs)	Height (inch)	Weight (lbs)	Height (inch)	Weight (lbs)	Height (inch)	Weight (lbs)
ANSI Flange RF	150	5.25	9.75	7.25	10	7.25	10	7.25	10.5
	300	5.25	11.5	7.25	11.75	7.25	12	7.25	12
	4/600	6.25	12.75	7.25	13	7.25	13	7.25	13
	9/1500	6.25	25.75	8.25	26	8.25	26.25	8.25	26.5
	2500	6.25	40.2	8.25	40.5	8.25	40.4	8.25	40.75
ANSI Flange RJ	150	5.25	9.75	7.25	9.75	7.25	13	7.25	13
	300	5.25	11.5	7.25	10	7.25	17	7.25	17
	4/600	6.25	12.75	7.25	11.75	7.25	18	7.25	18
	9/1500	6.25	25.75	8.25	25.75	8.25	38	8.25	38
	2500	6.25	40.1	8.25	40.1	8.25	45.5	8.25	45.5
API Flange	2000#	6.25	15.75	7.25	18	7.25	18	7.25	18
	3/5000#	6.25	31	8.25	38	8.25	38	8.25	38
	10000#	6.25	40.5	8.25	45.5	8.25	45.5	8.25	45.5

A DIVISION OF BAC CORROSION CONTROL
RCSL (A TRADING DIVISION OF BAC CORROSION CONTROL LTD)
STAFFORD PARK 11, TELFORD, SHROPSHIRE, TF3 3AY
T : +44 (0) 1952 290321 E : sales@rcslgroup.com W: www.rcslgroup.com
MEMBER OF MIDROC EUROPE

1.4
Two Inch Access Fitting System Accessories

Plug Assembly

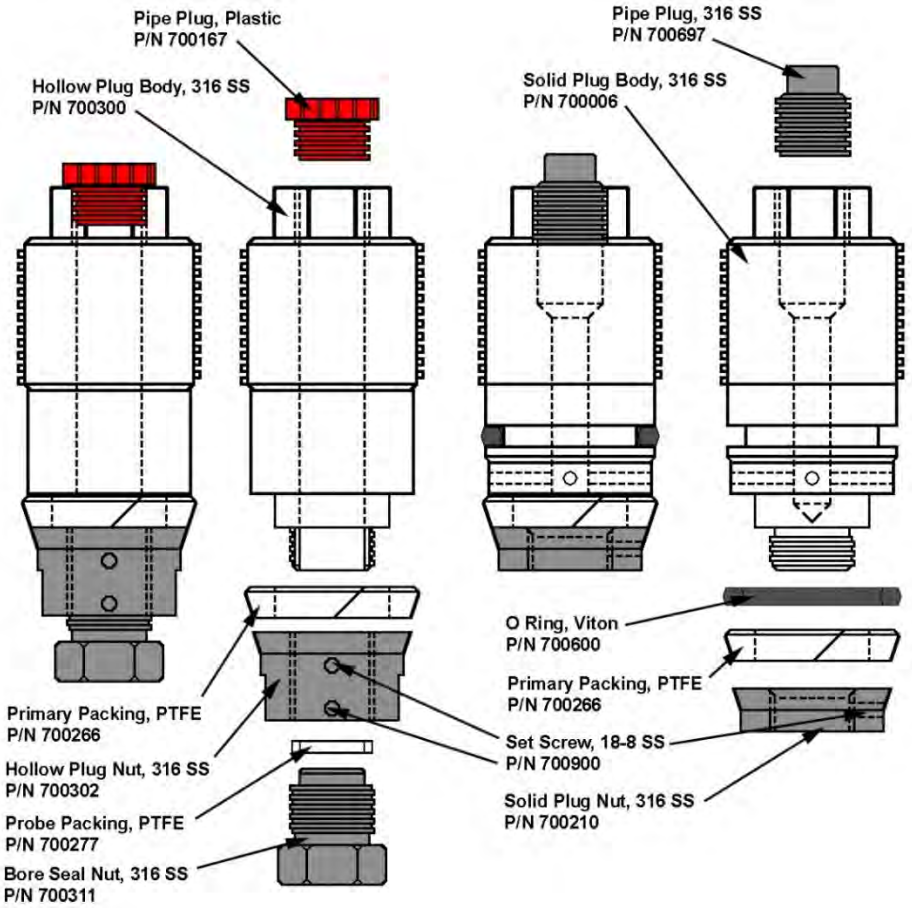

Standard Hollow Plug Assembly
Product Code: 700952-217-1

Standard Solid Plug Assembly
Product Code: 700120-111-1

Other plug material and seal options are available, the Product Code can be generated from the table below:

700952-2		700120-1	X	X	-	X
Hollow Plug	or	Solid Plug	Material 1. – 316 2. – 316L 3. – C276 4. – UNS S21800 5. – CS 6. – UNS S31803 7. – UNS N06625 8. – UNS N08825 9. – Ti A. – F44 B. – UNS S32750 C. – UNS S32760 D. – A105 E. – A350LF2 Z. – Other (Please Specify) Note: Option 4 has 316 S/S trim	Plug Seals 0. – Not Required 1. – Viton O-Ring, PTFE Prim. Pkg 2. – Ethylene Propylene O-Ring, VESPEL Prim. Pkg 3. – KALREZ O- Ring, VESPEL Prim. Pkg 4. – No O- Ring, UNS S21800 Prim. Pkg 5. – HYDRIN O- Ring, PTFE Prim. Pkg 6. – Other (Please Specify) 7. – PTFE Probe Seal, PTFE Prim. Pkg – Hollow Plug Only 8. – AED HNBR O- Ring, (Please Specify), PTFE Prim. Pkg 9. – PEEK Probe Seal, PEEK Prim. Pkg – Hollow Plug Only A. – AF69/90 O- Ring, PTFE Prim. Pkg B. – Nitrile O- Ring, PEEK Prim. Pkg C. – FR 25/90 O- Ring, PTFE Prim. Pkg D. – HNBR Elast-O-Lion 101 (RGD) O- Ring, PEEK Prim. Pkg E. – KALREZ O- Ring, PTFE Prim. Pkg F. – FR 58/90 (Viton B) AED O- Ring, PTFE Prim. Pkg G. – Viton AED O- Ring, PEEK Prim. Pkg H. – AFTLAS O- Ring, PEEK Prim. Pkg I. – Viton AED O- Ring, PTFE Prim. Pkg J. – Ethylene Propylene (EDPM) O- Ring, PTFE Prim. Pkg K. – Nitrile O- Ring, PTFE Prim. Pkg L. – HNBR Elast-O-Lion 985 O- Ring, PEEK Prim. Pkg M. – VERMILION® FOUR O- Ring, PTFE Prim. Pkg Note: Hollow plug can only have options 0, 6, 7 or 9.		Coating 0. – No Coating 1. – Standard Anti-Gall Coating 2. – Other (Please Specify)

A DIVISION OF BAC CORROSION CONTROL
RCSL (A TRADING DIVISION OF BAC CORROSION CONTROL LTD)
STAFFORD PARK 11, TELFORD, SHROPSHIRE, TF3 3AY
T : +44 (0) 1952 290321 E : sales@rcslgroup.com W: www.rcslgroup.com
MEMBER OF MIDROC EUROPE

1.4
Two Inch Access Fitting System Accessories

Protective Covers

Description - Application	Product Code	
Cover With Plain Hole – Continuous Monitoring (ER / LPR Probe)	700732	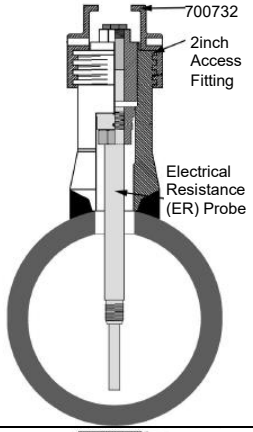
Cover without hole – Intermittent Monitoring (Coupons, bio probe) / Chemical Injection / Sampling / Sand probe	700734	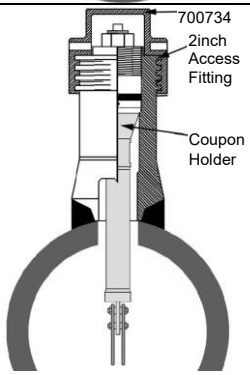
Cover With ½" NPT Hole For Fixed Probe Adapter – reduces dust / moisture ingress, Continuous Monitoring (ER / LPR Probe)	700732E	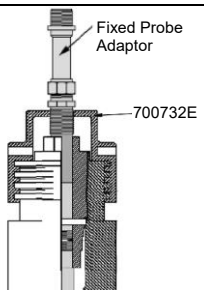
Pressure Retaining Cover With Bleed Valve – provides a secondary seal in case of leaks, with bleed valve to release pressure. For intermittent monitoring / injection / sampling	700480	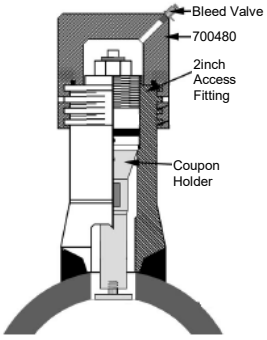
Pressure Retaining Cover With ½" NPT Hole For Fixed Probe Adaptor – provides a secondary seal in case of leaks for continuous monitoring with ER / LPR Probes	700731	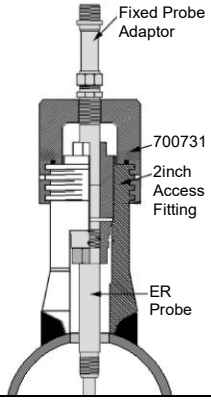

Description - Application	Product Code	
Cover With Plain Hole Non-metallic – Continuous Monitoring (Er & LPR probes)	700435	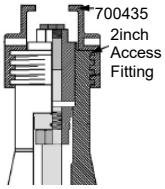
Cover Without Hole Non-metallic – Intermittent Monitoring (Coupons, bio probe) / Chemical Injection / Sampling / Sand probe	700436	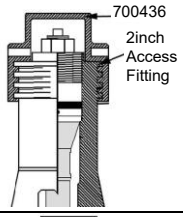
Special Cover – for use with hydrogen probes	700732B	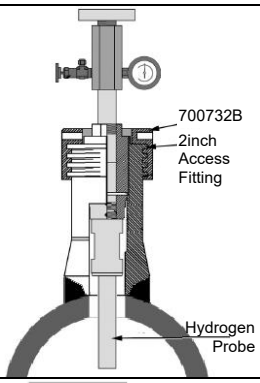
Pressure Retaining Cover, Plain – provides a secondary seal in case of leaks	700480P	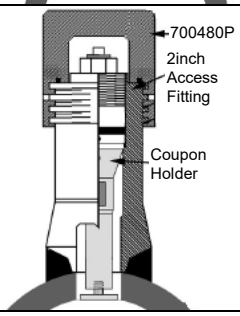
Pressure Retaining Cover With Bleed Valve & Pressure Gauge – Provides a secondary seal in case of leaks with bleed valve to release pressure prior to removal and pressure gauge to show pressure inside cover. For intermittent monitoring / injection / sampling	700481	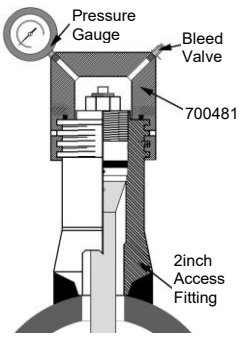
Pressure Retaining Cover With Bleed Valve, Pressure Gauge & ½" NPT Hole – Provides a secondary seal in case of leaks with bleed valve to release pressure prior to removal and pressure gauge to show pressure inside cover and ½" NPT hole for fixed probe adapter for continuous monitoring with ER / LPR Probes.	700482	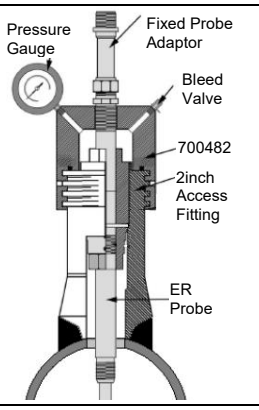

A DIVISION OF BAC CORROSION CONTROL
RCSL (A TRADING DIVISION OF BAC CORROSION CONTROL LTD)
STAFFORD PARK 11, TELFORD, SHROPSHIRE, TF3 3AY
T : +44 (0) 1952 290321 E : sales@rcslgroup.com W: www.rcslgroup.com
MEMBER OF MIDROC EUROPE

1.4
Two Inch Access Fitting System Accessories

Further options are available for the access fitting covers, please follow the below guide to generate the complete Product Code for the required cover.

Product Code	–	X	–	X	–	X
700XXX		Material 1. – 1022 CS 2. – 316 SS 3. – UNS S31803 4. – A105 / A350LF2 5. – TITANIUM 6. – A694 7. – A182·F44 8. – AISI4140 / EN19T / 708M40T 9. – UNS S32760 A. – POLYCARBONATE B. – NYLON C. – UNS N06625 D. – UNS N08825 Z. – Other (Please Specify)		O-Ring (Pressure Retaining Only) 0. – Not Required 1. – Viton O-Ring 2. – Ethylene Propylene O-Ring 3. – KALREZ O- Ring 4. – NOT USED 5. – HYDRIN O- Ring 6. – Other (Please Specify) 7. – NOT USED 8. – AED HNBR O- Ring, (Please Specify) 9. – NOT USED A. – AF69/90 O- Ring B. – Nitrile O- Ring C. – FR 25/90 O- Ring D. – HNBR Elast-O-Lion 101 (RGD) O- Ring E. – NOT USED F. – FR 58/90 (Viton B) AED O- Ring G. – NOT USED H. – AFTLAS O- Ring I. – Viton AED O- Ring J. – NOT USED K. – NOT USED L. – HNBR Elast-O-Lion 985 O- Ring M. – VERMILION® FOUR O- Ring		Coating 0. – NO COATING 1. – Std. Phosphate Coating With Blue Overpaint 2. – Phosphate Coating Only 3. – Other (Please Specify) Note: Phosphate Coating is only suitable for carbon steel.

Service Equipment

Application	Description	Product Code	
Maintenance of threads in the Access Fitting Body	Thread Tap Assembly, M2 Steel	700111	
Maintenance of threads on the Solid and Hollow Plug Bodies	Thread Die Assembly, M2 Steel	700112	
Removal of rust, scale etc. from the plug seat in the Access Fitting Body	Seat Reamer	700113	
For the removal of debris from the Access Fitting Body threads	Thread Brush	700114	
Maintenance of the 3 inch ACME thread on the Access Fitting Body	3 inch Acme Thread Cleaner	700115	-
Multi-purpose Grease	Lithium Grease	700116	-
For use in light hydrocarbon liquids	Silicone Grease	700117	-
For cleaning sand and debris from the Access Fitting Body Threads before installation of Solid and Hollow Plugs under pressure	Cleaning Tube Assembly	700118	-

A DIVISION OF BAC CORROSION CONTROL
RCSL (A TRADING DIVISION OF BAC CORROSION CONTROL LTD)
STAFFORD PARK 11, TELFORD, SHROPSHIRE, TF3 3AY
T : +44 (0) 1952 290321 E : sales@rcslgroup.com W: www.rcslgroup.com
MEMBER OF MIDROC EUROPE

1.5
Two Inch System Retriever Unit

The Retriever and Service Valve permit safe and simple removal of the full range of retrievable monitoring probes, coupon holders and chemical injection whilst the pipeline or vessel is under operating pressure.

For ease of reference, the item to be retrieved is herein after referred to as the “device”.

The retrieval tool has been designed to operate on the principal of balancing the pressure acting on the internal surfaces of the tool so that no resultant force is applied to the retriever moving parts whilst the equipment is being operated.

Retriever tools are sized to accommodate different pipeline pressures and probe/device lengths. All the materials of construction comply with the requirements of NACE standard MR-01-75 (92).

Retriever and Service Valve Kits include a heavy duty carrying case, maintenance tools and spare seals. A comprehensive Operation and Maintenance Manual is also included. Seal and Repair Kits are available separately at a moderate cost.

Operator training is minimal and is easily achieved once the basic principles of operation are understood. Training courses are available both on-site and off-site as required.

250 bar and 400 bar retrievers are available, these both feature stainless steel outer barrels.

A light weight retriever option is also available. This features an Aluminium outer barrel and is rated at 100 bar.

Figure A

A DIVISION OF BAC CORROSION CONTROL
RCSL (A TRADING DIVISION OF BAC CORROSION CONTROL LTD)
STAFFORD PARK 11, TELFORD, SHROPSHIRE, TF3 3AY
T : +44 (0) 1952 290321 E : sales@rcslgroup.com W: www.rcslgroup.com
MEMBER OF MIDROC EUROPE

How To Order

1) Retrievers are selected by the length of stroke required. The stroke is the distance the Plug Assembly and the device must travel from within the Access Fitting body, through the Service Valve allowing the valve to be closed.
2) From Figure A (page 1) and Table A (below) determine the Retriever stroke length required to retrieve the device. Please note that the maximum retrieval length varies depending upon whether the retriever is being used with a solid plug or a hollow plug. Also when calculating for injection / sampling / sand probe systems ensure to add the length of the associated nut to the quill / probe (device) length.

Table A	Stroke (mm)	Max. Length (mm)		Total Length (mm)		Removal Clearance	Product Code		
Nominal Stroke		With Solid Plug	With Hollow Plug	Collapsed	Extended		100 Bar	250 Bar	400 Bar
12"	305	76	51	496	804	1058		700631	
14"	355	127	102	546	905	1159		700599	
18"	457	228	203	648	1108	1362	700501	700601	700801
20"	508	278	254	699	1210	1464		700632	
25"	630	406	381	826	1463	1713	700502	700602	700802
32"	830	533	508	1003	1818	2069	700503	700603	700803
37"	940	711	685	1130	2073	2323	700504	700604	700804
40"	1016	838	813	1207	2226	2476		700597	
42"	1062	888	863	1257	2328	2578		700598	
49"	1224	1016	990	1435	2683	2937	700505	700605	700805
52"	1321	1091	1065	1511	2835	2957		700585	
62"	1530	1320	1295	1740	3292	3546	700506	700606	700806

These maximum lengths are only valid with 5.25 inch Flare-weld and Butt-weld Access Fittings. For maximum probe length with other Access Fitting configurations please contact our sales office.

Spare Parts & Tools			
Product Code	Description	Product Code	Description
700084	250bar Retriever Seal Kit	700674	Diverter Hose Assembly – 3M
700085	250bar Retriever Repair Kit	700676	Diverter Hose Assembly – 8M
700084 [400bar]	400 bar Retriever Seal Kit	700677	Diverter Hose Assembly – 15M
700085 [400bar]	400 bar Retriever Repair Kit	700678	Surge Tube Assembly
700047	Safety Hammer	700752	Field Operators Tool Kit
700066	Head Bar	700060	Retainer Clamp

Note: Please order 250bar seal kit and repair kit for use on 100 bar retriever.

Please see the service valve datasheet for detail on the service valves and their associated Product Codes.

A DIVISION OF BAC CORROSION CONTROL
RCSL (A TRADING DIVISION OF BAC CORROSION CONTROL LTD)
STAFFORD PARK 11, TELFORD, SHROPSHIRE, TF3 3AY
T : +44 (0) 1952 290321 E : sales@rcslgroup.com W: www.rcslgroup.com
MEMBER OF MIDROC EUROPE

1.6
Two Inch System Service Valve Kits

Service valves are required to connect the retriever tool to the Access Fitting to be serviced; its primary function is to contain the line pressure whilst the monitoring probe/injection device is replaced or removed.

Designed for ease of use in connection with a Retriever Tool, Service Valves are ball type valves with full opening port and feature two Bleed Valves which permit easier operation at high pressures. One valve allows pressure equalisation on both sides of the valve, thus allowing the valve to be opened without torque problems. The second valve allows pressure or product to be bled to atmosphere or for product sampling.

All service valves comply with NACE MR-0175 (92 Rev) requirements for materials suitable for use in sour service conditions.

Service Valves are available rated for 250 bar (3600psi) and 400 bar (5700psi).
Service Valves rated 250 bar are extremely compact with a total weight of 23 kilos.

How to order:

- Service Valve Kit – 250 Bar – Part No 700187
- Service Valve Kit – 400 Bar – Part No 700191

Spare Parts		
Description	**Pressure Rating**	**Product Code**
Service Valve Repair Kit	250 Bar (3600 psi)	700051
Service Valve Seal Kit	250 Bar (3600psi)	700052
Service Valve Repair Kit	400 Bar (5700psi)	700053
Service Valve Seal Kit	400 Bar (5700psi)	700054

A DIVISION OF BAC CORROSION CONTROL
RCSL (A TRADING DIVISION OF BAC CORROSION CONTROL LTD)
STAFFORD PARK 11, TELFORD, SHROPSHIRE, TF3 3AY
T : +44 (0) 1952 290321 E : sales@rcslgroup.com W: www.rcslgroup.com
MEMBER OF MIDROC EUROPE

1.7
Two Inch System Model HPH Hydraulic Retriever and Service Valve Kits

The Model HPH Hydraulic Retriever Tool is a single cylinder retriever of fixed length which is equilibrated at the same pressure as the pipeline or vessel to be serviced. An internal piston may be moved up or down by changing the pressure in the upper barrel of the retriever. Pressure differential of a few PSI is sufficient to move the piston. Downward movement is obtained by pumping oil into the upper part of the retriever using a small portable pump; upward motion is achieved by returning oil to the oil tank. Internal safety devices are provided to prevent excessive pressure differentials from being developed across the piston.

A Socket Adaptor Assembly is attached to the Internal piston. A Pilot on this Adaptor mates the assembly to the standard Triseal® 2" System Solid or Hollow plug.

When the piston is moved to the lower part of the retriever it may be connected to the retriever barrel which is then turned to screw or unscrew the Plug Assembly from the Triseal® access fitting body.

Minimum clearance requirements, minimum weight and full compatibility with all generic access fittings are major features of the HPH Retriever tool.

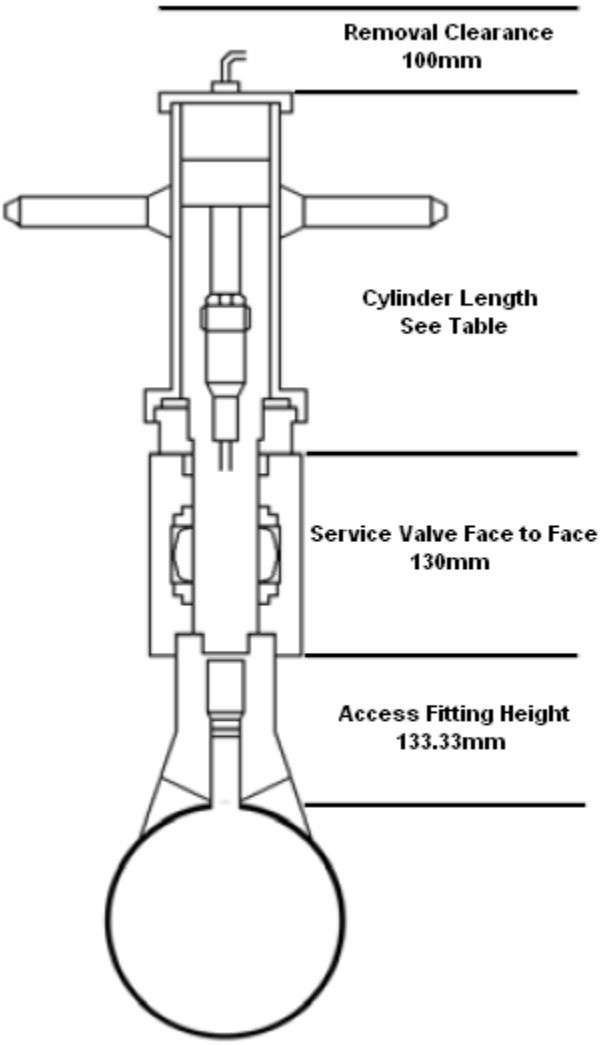

Triseal ® is the Registered Trade name of RCSL Corrosion Monitoring

A DIVISION OF BAC CORROSION CONTROL
RCSL (A TRADING DIVISION OF BAC CORROSION CONTROL LTD)
STAFFORD PARK 11, TELFORD, SHROPSHIRE, TF3 3AY
T : +44 (0) 1952 290321 E : sales@rcslgroup.com W: www.rcslgroup.com
MEMBER OF MIDROC EUROPE

HPH Retriever Ordering Information

How to Order:

1. Retriever size is determined by the length of piston movement required within the retriever cylinder. This is the distance of a plug assembly and probe must travel from within the access fitting body and through the service valve allowing the valve to be closed.
2. Determine the maximum working pressure required
3. Determine the maximum probe length required to be retrieved
4. From the tables below select the most suitable kit Product Code

250 Bar Maximum Working Pressure

Retriever Kit Product Code	700834	700835	700836	700837	700838	700839	700840	700841	700842
Maximum Probe Length (mm)	130	200	300	400	500	600	700	800	900
Removal Clearance (mm)	840	945	1096	1245	1395	1545	1695	1845	1995
Retrieval Cylinder Length (mm)	510	615	765	915	1065	1215	1365	1515	1665
Retriever Weight (kg)	15.75	17.2	18.7	20.5	22	23.7	25.6	27.7	29.85
Retriever Kit Weight (kg)	46.5	48	49.5	51.5	53.5	55.5	58	60.5	64

450 Bar Maximum Working Pressure

Retriever Kit Product Code	701100	701101	701102	701103	701104	701105	701106	701107	701108
Maximum Probe Length (mm)	130	200	300	400	500	600	700	800	900
Removal Clearance (mm)	840	945	1096	1245	1395	1545	1695	1845	1995
Retrieval Cylinder Length (mm)	510	615	765	915	1065	1215	1365	1515	1665
Retriever Weight (kg)	20.75	22.2	23.7	25.5	27	28.7	31.6	32.7	39.85
Retriever Kit Weight (kg)	54.5	56	57.5	59.5	61.5	63.5	64	68.5	72

Spare Parts

250 Bar	
Description	**Product Code**
Retriever Seal Kit	**700868**
Service Valve Seal Kit	**700877**
Hydraulic Pump	**700842**
Three Way Valve	**700844**

450 Bar	
Description	**Product Code**
Retriever Seal Kit	**701109**
Service Valve Seal Kit	**701110**
Hydraulic Pump	**701111**
Three Way Valve	**701112**

A DIVISION OF BAC CORROSION CONTROL
RCSL (A TRADING DIVISION OF BAC CORROSION CONTROL LTD)
STAFFORD PARK 11, TELFORD, SHROPSHIRE, TF3 3AY
T : +44 (0) 1952 290321 E : sales@rcslgroup.com W: www.rcslgroup.com
MEMBER OF MIDROC EUROPE

1.8
Two Inch System Hot Tap Tool
Product Code: HA102102

The hot tap tool provides a safe and reliable method of hot tapping high pressure access fittings on pressurised pipelines or vessels.

A special cutter assembly is installed in the access fitting, previously welded onto the pipe. To tap a hole through the pipe wall, a service valve is installed on the fitting. This allows the cutter fitting to be isolated, if necessary.

The hot tap tool is mounted on the service valve and mated to the cutter. The drive screw on the hot tap tool puts pressure on the cutter as the tool shaft is rotated to cut through the pipe wall.

After the hole is cut through the pipe wall, the tool is removed from the valve and the retrieval tool is then used to pull the cutter assembly and pipe plug from the fitting. Shavings and cuttings are removed using swabs or brushes.

The hot tap procedure may be expedited by use of an air operated drill motor to turn the cutter shaft. Safety is enhanced in the assembly because the cutter is isolated from the atmosphere by a service valve.

At any time in the procedure, the cutter drive shaft may be retracted and the fitting and its contents isolated from the atmosphere by closing the service valve.

The hot tap tool is designed to be used with 5.25" Flare-weld or Butt-weld access fitting systems.

A compatible service valve is required for use with the hot tap kit, the product code is HA101250

Hot Tap Kit HA102102 Components & Spare Parts			
Description	**Product Code**	**Description**	**Product Code**
Bore Reamer Assembly	HA102004	3/16" Allen Wrench	PR6352
HP Thread Chaser with Adaptor	HA102016	Spanner Wrench	PR6356
Seat Reaming Assembly	HA102018	1⅜" Hex Socket	PR6433
Weld and Seal Test Assy	HA102017	Snap Ring Pliers (internal)	PR6479
Cutter Assembly - HP 5.25 Nipple	HA102015	Seal Insertion Ring	PR6480
HP Cutter Test for CT Cutter Test Assy	HA102020	Brass Hammer	PR6358
Bushing Insertion Tool	PR6483	3/32" Allen Wrench	PR6478
Hot Tap and Extraction Tool Test Assy	HA102013	Snap Ring Pliers (external)	PR6484
Hot Tap Turning Handle	HA102007	Quick Coupling (female)	PR6477
Over shot for Cutter	HA102014	½" Drive, socket "T" Handle	PR6357
Adaptor for Tools	HA102001158	Case	PS5604A69
Magnetic Swab Assembly	HA102003	Seal Repair Kit	7213A

The above tools are furnished as standard equipment with each complete Hot Tap Tool Kit. In addition common tools such as 3/16” Punch, large Crescent Wrench and large screwdriver may be necessary.

A DIVISION OF BAC CORROSION CONTROL
RCSL (A TRADING DIVISION OF BAC CORROSION CONTROL LTD)
STAFFORD PARK 11, TELFORD, SHROPSHIRE, TF3 3AY
T : +44 (0) 1952 290321 E : sales@rcslgroup.com W: www.rcslgroup.com
MEMBER OF MIDROC EUROPE

1.9
Model 600 Retractable System Access Valve

The Model 600 Access Valve Assemblies are designed to allow access to pressurised areas without process shutdown, using the retractable system.

Versions are available for threaded or for flanged connection.

The assembly shown at right consists of:

1. Threadolet
2. TBE Nipple
3. Ball valve
4. 5" inter-joint nipple
5. Thread adaptor (if required)

NOTE: The 5" nipple is used as standard, and is suitable for all probe elements except coupon holding shields which require a 9" nipple.

It is recommended that the inter-joint nipple has a bleed valve (10.), to allow release of pressure prior to removing the retractable device.

The full port valve can be supplied in whichever materials customer requires, as standard carbon steel body with 316 stainless steel trim would be supplied, with seals and materials of construction complying with NACE standard MR0175.

Flanged Outlets to connect with a pipeline or vessel mating flange are available.

The Model 600 Access Valve Assembly is suitable for use with a range of retractable products, including ER4**0 Electrical Resistance Probes, LP4**00 Linear Polarisation Resistance Probes, RT4000 Coupon Holder, IP4000 Injection as well as Hydrogen, Sand and Galvanic Probes.

The example shown at right features threaded connections and is portrayed being used with an RT4000 retractable coupon holder (items 6-9 are the coupon holder and coupon).

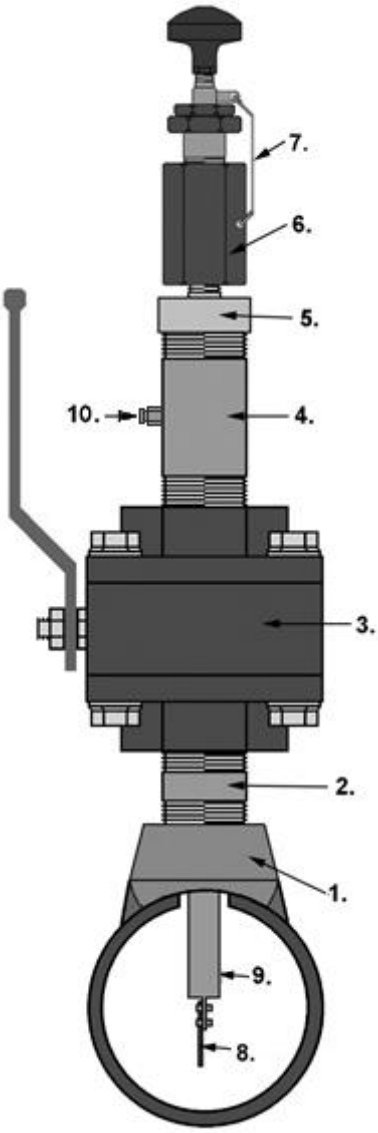

A DIVISION OF BAC CORROSION CONTROL
RCSL (A TRADING DIVISION OF BAC CORROSION CONTROL LTD)
STAFFORD PARK 11, TELFORD, SHROPSHIRE, TF3 3AY
T : +44 (0) 1952 290321 E : sales@rcslgroup.com W: www.rcslgroup.com
MEMBER OF MIDROC EUROPE

1.10
Model SR2159 “Easy Tool” Retractor For The Retractable System

The Easy Tool Retracting System is designed for the safe insertion or retraction of 4000 series systems, including electrical resistance probes (ER), linear polarisation probes (LP), coupon insertion systems (RT), and chemical injection systems (IP).

RCSL Corrosion Monitoring Systems recommends that an Easy Tool is used when working on systems with pressures over 150 psi, to control the retraction of the 4000 series product.

The Easy Tool can insert/retract standard electrical resistance probes and coupon insertion systems up to 42".

With a weight of under 15 pounds and an overall length of 44", the Easy Tool is one of the lightest and shortest retracting tools available on the market.

The Easy Tool can be used with most standard packing glands.

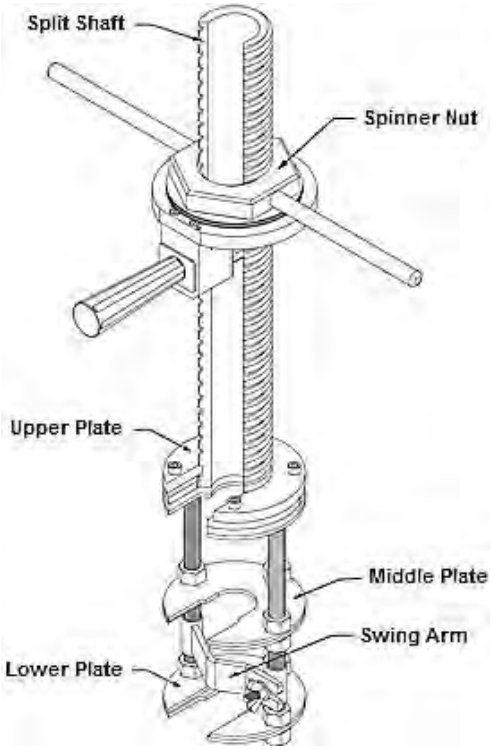

Ordering Product Code Generation	
SR2159ER24	Insertion length of 24"
SR2159ER36	Insertion length of 36" (standard size)

SR2159 Easy Tool & Carry Case

A DIVISION OF BAC CORROSION CONTROL
RCSL (A TRADING DIVISION OF BAC CORROSION CONTROL LTD)
STAFFORD PARK 11, TELFORD, SHROPSHIRE, TF3 3AY
T : +44 (0) 1952 290321 E : sales@rcslgroup.com W: www.rcslgroup.com
MEMBER OF MIDROC EUROPE

2.0
Corrosion Coupons, Coupon Holders & Accessories

Sub-Section No.

2.1
Two-Inch System HC Series Retrievable Coupon Holders

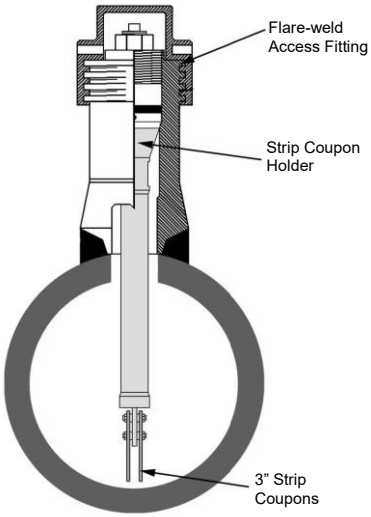

HC Series Coupon Holders are used in conjunction with the TRISEAL® High Pressure Access Fitting Assembly.

The Coupon Holder is attached to the Solid Plug Assembly by means of a standardised left handed threaded connection and it also retains the primary packing.

The standard material for coupon holders is 316 SS, other alloys are available as required to meet the specific requirement.

Coupon holders are available in lengths from 2.50 inches to 36 inches. Longer lengths can be supplied subject to passing wake frequency calculations.

Coupon holders are supplied complete with a fitting kit for the applicable coupon.

Corrosion Coupons can be supplied in most alloys, please see our separate data sheet for more details of the coupons.

High Pressure Coupon Holder Ordering Product Code Generation Product Code: HCXXX-XXXX				
HC	**X**	**X**	**X**	**XXXX**
	Coupon Type 1 – Strip coupon 2 – Ladder strip 3 – Flush Disc Fixed 4 – Flush Disc Adj. 5 – Multi Disc 6 – Single Pre-stressed 7 – Multi Pre-stressed 8 – Other / Special (Please Specify)	**Construction** 1 – Welded 2 – Non welded	**Coupon Holder Material** 1 – 316 SS 2 – Hastelloy C276 3 – UNS S31803 DSS 4 – UNS S32750 SDSS 5 – UNS S32760 SDSS 6 – UNS N06625 7 – UNS N08825 8 – 321 SS 9 – 410 SS A – UNS S32205 DSS Z – Other (Please Specify)	**Coupon Holder Length** 2" to 40" in 1/8" increments. Examples below: 2" = 0200 40" = 4000 2.625" = 0262 For Flush Disc Adjustable put start adjustment range (e.g 4 to 5inch range put 0400)

Coupon Holder Accessories / Spare Parts	
Description	Product Code
Set Screw, 18-8 SS	700900
Strip / Ladder Coupon Fitting Kit	700567
Flush Disc Coupon Fitting Kit	700620
Multiple Disc Coupon Insulating Rod (sold per inch)	305 003 0014
Multiple Disc Coupon Washer	301 004 0023
Multiple Disc Coupon Holder Nut	301 004 0024

A DIVISION OF BAC CORROSION CONTROL
RCSL (A TRADING DIVISION OF BAC CORROSION CONTROL LTD)
STAFFORD PARK 11, TELFORD, SHROPSHIRE, TF3 3AY
T : +44 (0) 1952 290321 E : sales@rcslgroup.com W: www.rcslgroup.com
MEMBER OF MIDROC EUROPE

Strip Coupon Holder

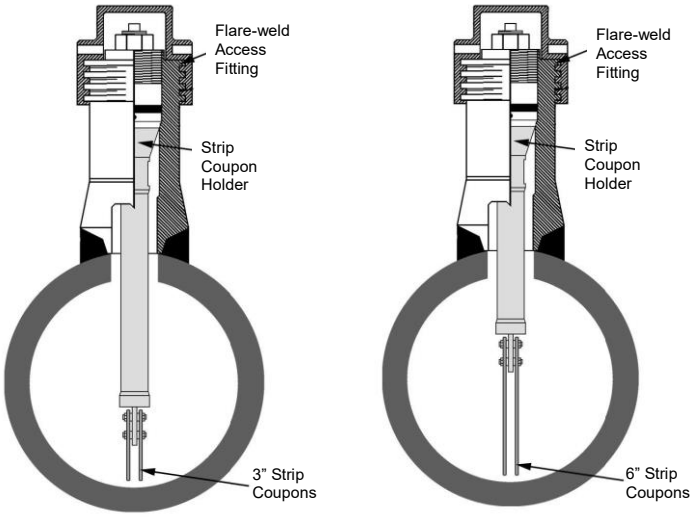

Strip coupons are designed for intrusive monitoring and are suitable for monitoring any kind of pipe at any location within the pipe.

Standard strip coupons are available in "3inch" (2.875" x 0.875" x 0.125" and 6inch (6" x 0.875" x 0.125") variants.

Both coupon sizes have 2x mounting holes at one end, the holes are pre-fitted with insulators in Nylon (standard) or PTFE (optional).

Flush Disc Coupon Holder

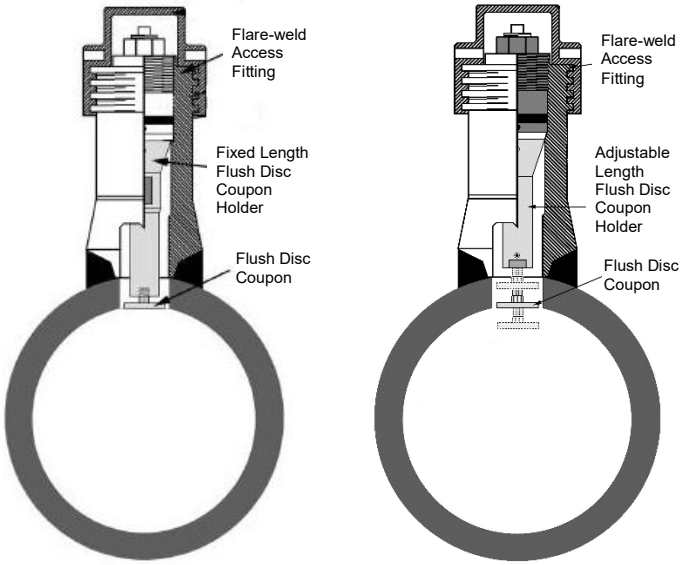

Flush disc coupon holders are primarily intended for use in areas where pigging operations prohibit the use of coupons that project into the process flow and are also suitable for use in pipelines carrying gas.

Additional advantages are the lack of requirement to orient the coupon relative to the flow direction and a greater exposed surface area at the pipe wall.

Flush disc coupon holders are available as fixed length and as adjustable length, to suit the specific application.

Flush disc coupons measure Ø1.25" x 0.125" with a central countersunk hole

Multiple Disc Coupon Holder

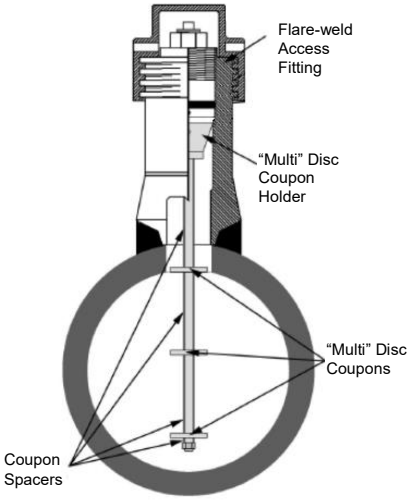

Multiple Disc Coupon monitoring is suitable for pipes with I.D. greater than 6.00 inches.

Multiple Disc Monitoring permits coupons to be placed at a specific level in multi-phase or stratified flow.

The coupons are insulated from the holder rod by Nitrile O rings. Delrin or Nylon Spacers are used to provide insulation between coupons.

Materials of construction satisfy the requirements of NACE MR-01-75

"Multi" Disc Coupons measure Ø1.25" x 0.125" with a central plain mounting hole

RCSL (A TRADING DIVISION OF BAC CORROSION CONTROL LTD)
STAFFORD PARK 11, TELFORD, SHROPSHIRE, TF3 3AY
T : +44 (0) 1952 290321 E : sales@rcslgroup.com W: www.rcslgroup.com

Ladder Strip Coupon Holder

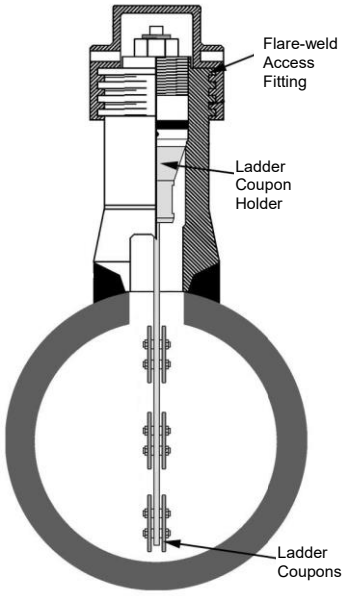

Ladder Strip Coupon Monitoring is suitable for pipes 8 inch O.D. and greater.

The coupon holder body is a single blade containing holes spaced along its length for mounting the coupons.

Ladder strip coupons measure 2" x 0.875" x 0.125", with 2x mounting holes.

A minimum coupon holder length of 26 cm (10.25") is required to mount three pairs of 2" ladder coupons.

Applied Stress Coupon Holder

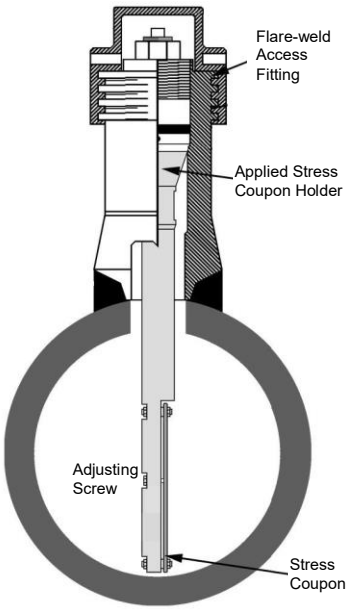

Applied Stress Coupons are 152mm (6 inches) long, 22.3mm (0.875 inches) wide, 3.18mm (0.125 inches) thick. An insulated adjusting screw located on the coupon mid-point applies stress to the coupon.
Note: Applied stress coupons have been stamped on the end because this is the lowest stress area and cracking is not expected to be initiated by the identification mark.

Applied stress is determined from the number of adjusting screw turns or bending deflection. The coupons are first stressed and then installed in the line. The time required for cracks to develop is determined by pulling coupons at regular intervals, usually 24 hours to 30 days. Test duration will vary with the stress level applied to the coupon. The time to crack may then be used as a measure of stress corrosion resistance.

Test start time begins when stress is applied and the stressed coupon is exposed to the corrosive environment, whichever occurs later. The coupon is considered to have failed when cracks appear. The cracks may be detected by optical, mechanical or electrical means.

Cracking time is the elapsed time from test start until the appearance of cracks.

Formula for Applied Stress Coupons:
$S = 6Ety/H$
Where:
S = maximum tensile stress
E = modulus of elasticity
t = thickness of coupon
y = maximum deflection

The formula is for longitudinal stress in the outer fibers of the coupon, below the elastic limit of the material. At stress above the elastic limit, but below the yield strength at 0.2% error results. The formula must not be used above the yield strength of the material.
NOTE: The formula is based on small deflections i.e. y/H is less than 0.1.

A DIVISION OF BAC CORROSION CONTROL
RCSL (A TRADING DIVISION OF BAC CORROSION CONTROL LTD)
STAFFORD PARK 11, TELFORD, SHROPSHIRE, TF3 3AY
T : +44 (0) 1952 290321 E : sales@rcslgroup.com W: www.rcslgroup.com
MEMBER OF MIDROC EUROPE

2.2
Coupons for the Two-Inch Retrievable Access Fitting System

Corrosion coupons are available in a range of alloys. As standard coupons are ground to shape with a blast surface finish.

Coupon ordering product codes are generated as XXX-“Alloy”
For example 111-1018 = 3inch strip coupon in C1018 carbon steel.

Standard Coupons

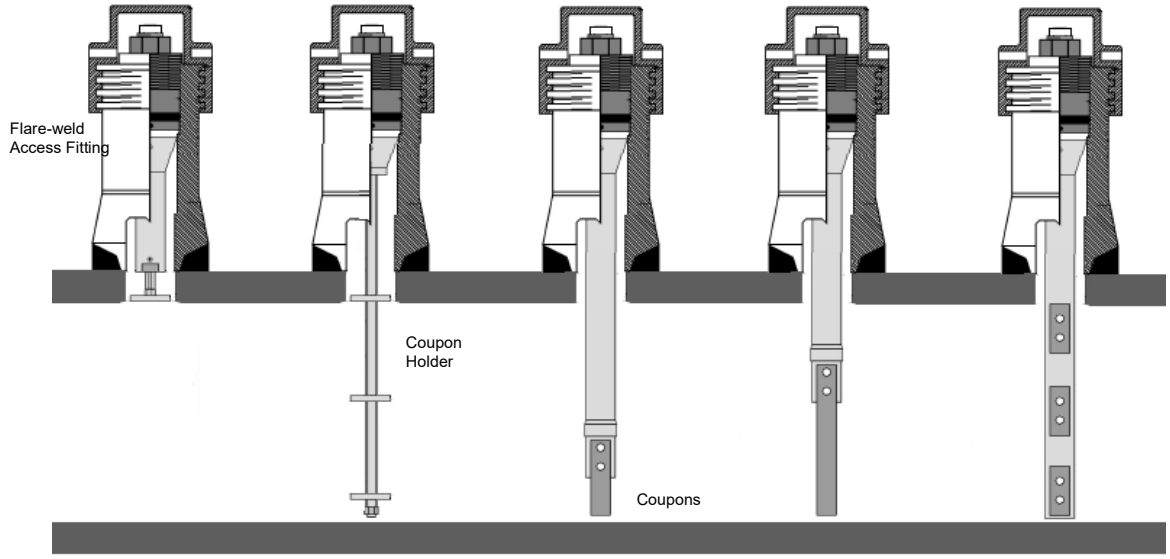

FLUSH DISC	MULTIPLE DISC	3” STRIP	6” STRIP	2” LADDER

3 Inch Strip Coupons
Product Code: 111-“Alloy”

Dimensions: 73 x 22 x 3.2mm (2.875in x 0.875in x 0.125in)

Two mounting holes at one end centred, holes are fitted with insulators (nylon as standard, other materials are available)

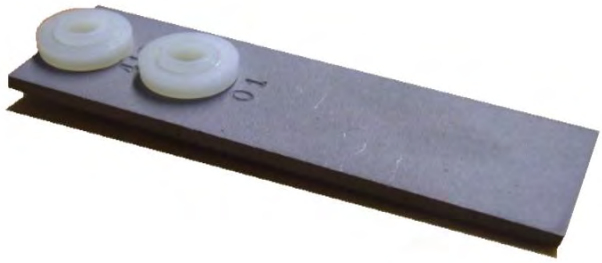

6 Inch Strip Coupons
Product Code: 169-“Alloy”

Dimensions: 152 x 22 x 3.2mm (6in x 0.875in x 0.125in.)

Two mounting holes at one end centred, holes are fitted with insulators (nylon as standard, other materials are available)

Ladder Strip Coupons,
Product Code: 197-“Alloy”

These are designed for simultaneous corrosion monitoring at top, middle and bottom positions in a pipeline of 8inches in diameter or larger.

Dimensions 51 x 22 x 32mm (2in x 0.875in x 0.125 in)

Two mounting holes centred, holes are fitted with insulators (nylon as standard, other materials are available)

A DIVISION OF BAC CORROSION CONTROL
RCSL (A TRADING DIVISION OF BAC CORROSION CONTROL LTD)
STAFFORD PARK 11, TELFORD, SHROPSHIRE, TF3 3AY
T : +44 (0) 1952 290321 E : sales@rcslgroup.com W: www.rcslgroup.com
MEMBER OF MIDROC EUROPE

2.2
Coupons for the Two-Inch Retrievable Access Fitting System

Flush Disc Coupons
Product Code: 142-"Alloy"

Typically utilised where the coupons should not extend into the pipe or interfere with the media flow or pig passage, or for gas applications.

Dimensions: Ø31.8 x 3.2mm (Ø1.25in x 0.125in)

Central countersunk mounting hole. Insulators are available separately as part of the coupon fitting kit.

Multi-Disc Coupons
Product Code: 141-"Alloy"

These are utilised for stacked multiple phase monitoring when the line diameter is 6 inches or more. For pipelines less than 6 inches it is recommended to use single disc.

Dimensions Ø31.8 x 3.2mm (Ø1.25in x 0.125in)

Central mounting hole

Scale Coupons:
Product Code: 185-"Alloy"

These are the same size as the 3inch strip coupon, but have a series of holes of different sizes. Scale usually forms on cavities therefore it is likely to form on small sized holes, which holes are blocked by scale provide an indication of scale build-up.

Dimensions: 73 x 22 x 3.2mm (2.875in x 0.875in x 0.125in)

Two mounting holes at one end centred, holes are fitted with insulators (nylon as standard, other materials are available)

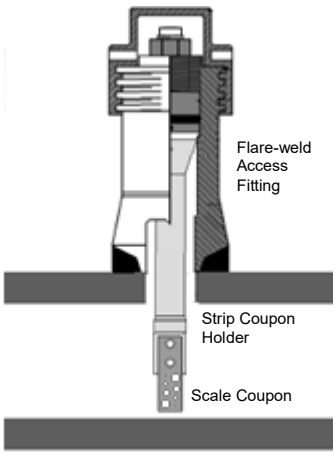

Special Coupons

Applied Stress Coupons:

These are used where sulphide stress corrosion cracking is a factor.

Applied Stress Coupons are 152mm (6 inches) long, 22.3mm (0.875 inches) wide, 3.18mm (0.125 inches) thick. An insulated adjusting screw located on the coupon mid-point applies stress to the coupon.

Note: Applied stress coupons have been stamped on the end because this is the lowest stress area and cracking is not expected to be initiated by the identification mark.

Residual Stress Coupons:

These are rectangular coupons similar to the 3 inch strip coupons, but are deformed to create residual stress. This type of coupon stimulates any corrosion effect due to the residual stress present in combination with an embrittling environment.

Crevice Corrosion Coupons:

These are made from the standard Disc Coupon, dimensions 31.8 dia. x 3.2mm (1.25 inch dia. x 0.125 inch) with a nylon disc on each side held in position by a stainless steel screw.

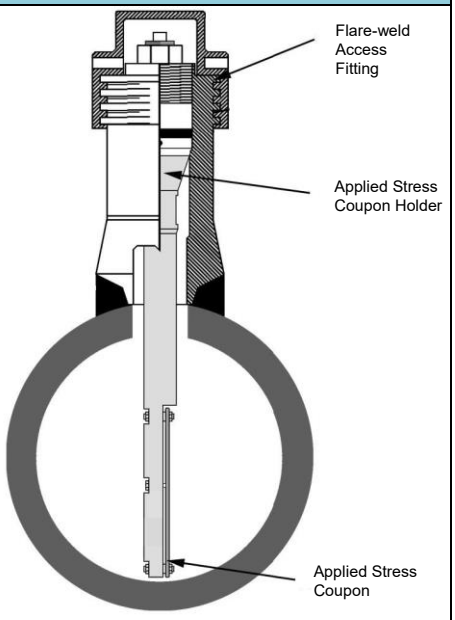

All pictures are illustrative only, the supplied product may differ

A DIVISION OF BAC CORROSION CONTROL
RCSL (A TRADING DIVISION OF BAC CORROSION CONTROL LTD)
STAFFORD PARK 11, TELFORD, SHROPSHIRE, TF3 3AY
T : +44 (0) 1952 290321 E : sales@rcslgroup.com W: www.rcslgroup.com
MEMBER OF MIDROC EUROPE

2.3
Model RT6000
Fixed Length Coupon Holder, Flanged Connection

The Model RT 6000 is a fixed-length, flange-mounted, coupon insertion system, suited to applications where coupon replacement can coincide with scheduled plant shut downs, thus avoiding the additional expense and complexity of access fittings and retrieval / retractor tools.

The RT6000 is ideally suited for use in high pressure and / or hazardous applications where threaded fittings are not available or not recommended.

Insertion length (I.L.) is calculated to the end of the coupon and is based on a 1 inch total flange thickness.

Customers can specify any length required.

For standard coupons, the maximum insertion length is given in the chart below (the insertion length is fixed at the factory).

The system components are as follows:

1. RT6000 Coupon Holder
2. Mounting flange
3. Coupons

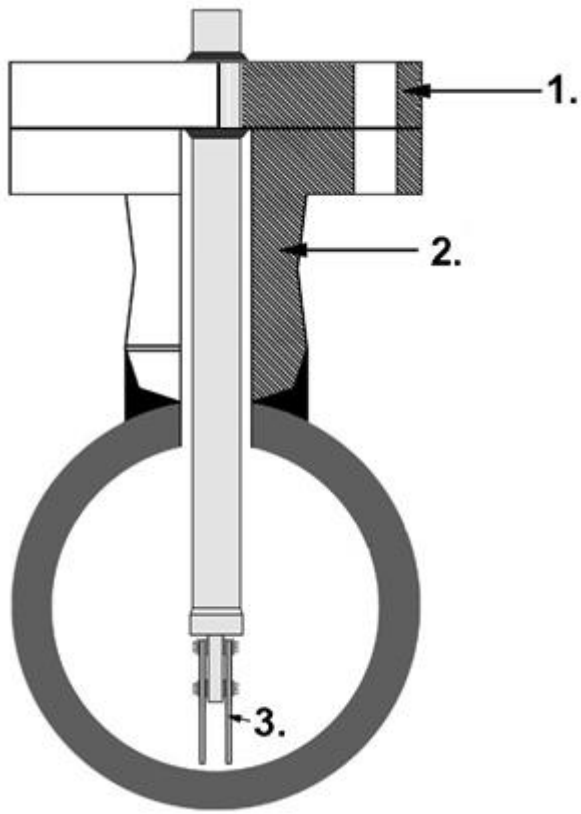

Specifications			
Coupon Holder Body	As required by customer	Order Length	I.L. (max)**
Temperature Rating	260°C / 500°F Teflon®	8"	6"
Pressure Rating	According to Flange Rating	12"	10"
Mounting	Flanged branch on pipe	18"	16"
		24"	22"

A DIVISION OF BAC CORROSION CONTROL
RCSL (A TRADING DIVISION OF BAC CORROSION CONTROL LTD)
STAFFORD PARK 11, TELFORD, SHROPSHIRE, TF3 3AY
T : +44 (0) 1952 290321 E : sales@rcslgroup.com W: www.rcslgroup.com
MEMBER OF MIDROC EUROPE

2.3
Model RT6000
Fixed Length Coupon Holder, Flanged Connection

Model RT6000 Ordering Product Code Generation							
RT6	Coupon Insertion System with Flange						
	Flange Size						
	1	1 inch Flange					
	2	1.5 inch Flange					
	3	2 inch Flange					
	4	3 inch Flange					
	5	4 inch Flange					
	6	0.5 inch Flange					
	7	6 inch Flange					
		Coupon Holder Material					
		22	316				
		44	C276				
			Coupon Option				
			10	Fits P/N C0100			
			30	Fits P/N C0118			
			50	Fits P/N C0111			
			60	Fits P/N C0220			
				Flange Pressure Rating			
				1	150 lb	Append with A for RF flanges Append with B for RTJ flanges API flanges can also be offered	
				2	300 lb		
				3	600 lb		
				5	1500 lb		
				6	900 lb		
				7	2500 lb		
					Length		
					8	06.00 inch max. insertion length	For lengths other than standard please insert the actual length in inches
					12	10.00 inch max. insertion length	
					18	16.00 inch max. insertion length	
					24	22.00 inch max. insertion length	
					36	34.00 inch max. insertion length	
RT6	**2**	**22**	**50**	**1A**	**12**	**Example of RT6000 Ordering Product Code**	

A DIVISION OF BAC CORROSION CONTROL
RCSL (A TRADING DIVISION OF BAC CORROSION CONTROL LTD)
STAFFORD PARK 11, TELFORD, SHROPSHIRE, TF3 3AY
T : +44 (0) 1952 290321 E : sales@rcslgroup.com W: www.rcslgroup.com
MEMBER OF MIDROC EUROPE

2.4
Model RT4000
Retractable Coupon Holder With Packing Gland

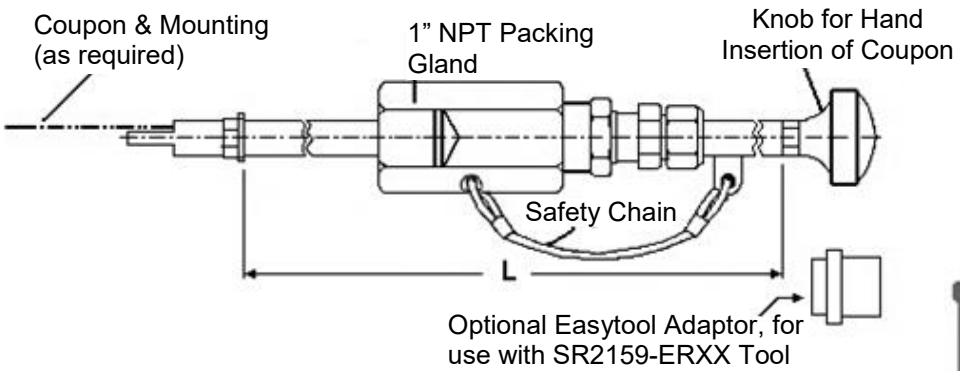

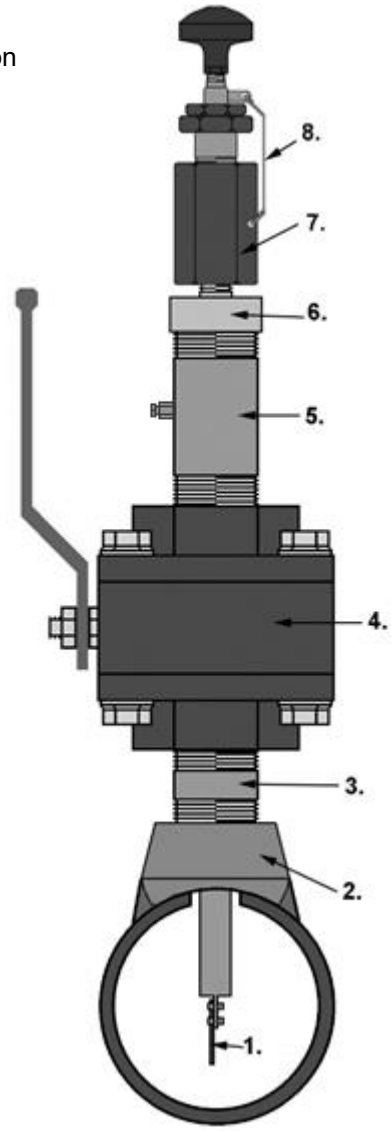

Pictures are for illustrative purposes only, other mounting options are available

Model RT4000 coupon insertion system is a retractable unit commonly used in field and plant applications.

A specially designed packing gland is used to insert or retract a coupon from a pressurised system without a process shutdown.

The insertion system is designed to mount onto a 1" piping system, but can easily be adapted to fit your specific requirements.

The system consists of an insertion rod with a coupon adapter, and a packing gland. A safety chain and safety nut are also provided to prevent blowout. The insertion length (I.L.) is adjustable up to the maximum shown below.

Standard packing material in the packing gland is Teflon®, however, Grafoil packing can be provided for high temperature applications.

Coupon holders are available in various lengths and to suit various coupons, please see page 2 for ordering information.

Key	
1 – Coupon (strip type shown) 2 – Thredo-let (flanged connection is available) 3 – TBE Pipe Nipple 4 – Full Bore Ball Valve (flanged connection is available)	5 – TBE Pipe Nipple (usually fitted with bleed valve) 6 – Thread adaptor (if required) 7 – Packing gland 8 – Safety chain Items 1-6 are supplied separately from the RT4000

Specifications				
Standard Material	316 Stainless Steel*		Order Length	I.L. (max)***
Temperature Rating	260°C / 500°F Teflon®		24"	18.54"
Temperature Rating	454°C / 850°F Grafoil®		30"	24.54"
Pressure Rating	2000 PSI / 138 Barg**		36"	30.54"
Mounting	Minimum 1" Full Bore Valve		42"	36.54"

* Other material options are available

** Easy Tool (Product Code: SR2159-ERXX) is recommended for insertion or retraction in systems with pressure over 150 psi

*** The insertion length (I.L.) shown here is based on a standard 3" strip coupon and may vary for other coupons depending on the coupon length and hole location(s)

A DIVISION OF BAC CORROSION CONTROL
RCSL (A TRADING DIVISION OF BAC CORROSION CONTROL LTD)
STAFFORD PARK 11, TELFORD, SHROPSHIRE, TF3 3AY
T : +44 (0) 1952 290321 E : sales@rcslgroup.com W: www.rcslgroup.com
MEMBER OF MIDROC EUROPE

2.4
Model RT4000
Retractable Coupon Holder With Packing Gland

Model RT4000 Ordering Product Code Generation					
RT45	Retractable Coupon Insertion System 1 inch Female NPT, Packing Gland with Teflon®				
RT75	Retractable Coupon Insertion System 1 inch Female NPT, Packing Gland with Grafoil®				
RT00	Retractable Coupon Insertion System Replacement Insertion Rod				
	Insertion Rod and Mounting Material				
	20	316 (when ordering only Insertion Rod – RT00)			
	22	316			
	40	C276 (when ordering only Insertion Rod – RT00)			
	44	C276			
		Coupon Options			
		010	Fits P/N CO100		
		030	Fits P/N CO118		
		040	Fits P/N ES200 (Cylindrical Coupons)		
		050	Fits P/N CO111		
		060	Fits P/N CO220		
			Length		
			24	18.54 inch max. insertion length	
			30	24.54 inch max. insertion length	
			36	30.54 inch max. insertion length	
			42	36.54 inch max. insertion length	
				Coupon Adapter and Insulators	
				1	Coupon adapter same material as rod, Teflon® insulators.
				2	Teflon® coupon adaptor, Teflon® insulators.
				3	Coupon adapter same material as rod, ceramic insulators.
				4	Coupon adapter same material as rod, nylon insulators.
				5	Nylon coupon adaptor, nylon insulators.
				6	Coupon adapter same material as rod, no insulators.
RT45	**22**	**30**	**24**	**1**	**Example of RT4000 Ordering Product Code**

For alloys, sizes, or other special requirements not listed, please contact our sales department.

Safety clamps are available separately, these provide additional support to the packing gland and safety chain to control the positioning of the coupons within the pipe.

Safety Clamp Assembly Product Codes:	
PS5463141**XX**	Replace XX with Length, e.g. PS5463141**24**
PR5637158	Easy Tool / Safety Clamp Adaptor

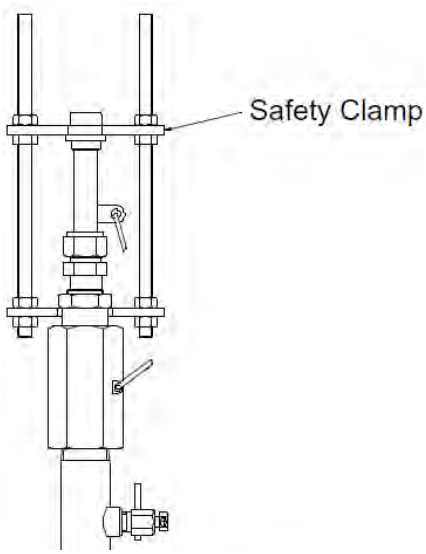

A DIVISION OF BAC CORROSION CONTROL
RCSL (A TRADING DIVISION OF BAC CORROSION CONTROL LTD)
STAFFORD PARK 11, TELFORD, SHROPSHIRE, TF3 3AY
T : +44 (0) 1952 290321 E : sales@rcslgroup.com W: www.rcslgroup.com
MEMBER OF MIDROC EUROPE

2.5
Corrosion Test Supplies for the Water Treatment Industry

Accurate monitoring of corrosion rates in any environment is critical when viewed in terms of the maintenance and repair costs associated with corrosion and material failure. Test coupons can provide an inexpensive means of effectively monitoring corrosion levels in a system. By observing the mils-per-year corrosion rate of an exposed coupon, valuable information can be provided regarding the material's life expectancy.

RCSL Corrosion Monitoring provides the water treatment industry with a wide assortment of corrosion test supplies. We specialise in expeditious order processing of test coupons made according to your needs for material, size, shape and finish.

Coupons can be stencilled with alloy and sequence numbers for proper identification and pre-weighed and measured to help assure the integrity of your test data.

Mill test reports, identifying element compositions of materials used, can be provided for coupons if required, please advise this when ordering.

Coupon Product Codes are 3 digits and then the required alloy, for example 100-C1010.

Standard Water Treating Coupons*

Product Code	Coupon Dimensions	Mounting Hole Detail		Coupon Approx. Area (in^2)
100-Alloy	½" x 3" x 1/16"	3/16"	¼" fr.end	3.38
101-Alloy	1" x 2" x 1/16"	3/16"	¼" fr.end	4.32
102-Alloy	½" x 3" x 1/16"	9/64"	1/8" fr.end	3.41
103-Alloy	½" x 3" x 1/16"	¼"	¼" fr.end	3.34
104-Alloy	½" x 3" X 1/16"	(2) ¼"	½" fr.end	3.24
105-Alloy	½" x 3" x 1/16"	3/16"	½" fr.end	3.38
106-Alloy	½" x 3" x 1/16"	¼"	½" fr.end	3.34
115-Alloy	½" x 3" x 1/16"	¼"	¼" fr.end	3.34
117-Alloy	3/8" x 3"x 1/16"	9/64"	1/8" fr.end	2.64
118-Alloy	½" x 3" x 1/16"	(2) ¼"	¼" and ¾" end	3.24
120-Alloy	3/8" x 3" x 1/16"	(2) ¼"	¼" and ¾" end	2.48
131-Alloy	2" x ¾" x 1/8"	3/8"	Central	3.47
146-Alloy	2" x 1" x 1/16"	53/200"	Central	4.26
220-Alloy	Ø1¼" x 1/8"	3/8"	Central	2.72

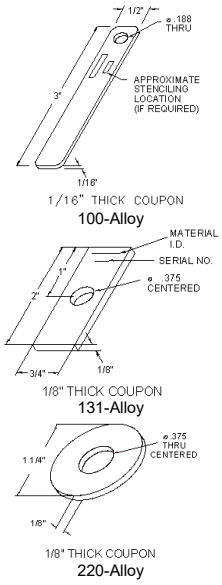

Standard Pipe Plug Assemblies

Product Code	Carbon Steel Or PVC Plug*	3" (std) Stem*	Compatible With Product Code(s)
2077NA	¾" NPT	Nylon	102-Alloy, 117-Alloy
2079NA	1" NPT	Nylon	102-Alloy, 117-Alloy
2077TA	¾" NPT	Teflon®	102-Alloy, 117-Alloy
2079TA	1" NPT	Teflon®	102-Alloy, 117-Alloy
2078NA	¾" NPT	Nylon	100-Alloy, 103-Alloy, 115-Alloy
2081NA	1" NPT	Nylon	100-Alloy, 103-Alloy, 115-Alloy
2078TA	¾" NPT	Teflon®	100-Alloy, 103-Alloy, 115-Alloy
2081TA	1" NPT	Teflon®	100-Alloy, 103-Alloy, 115-Alloy
2087NA	¾" NPT	Nylon	118-Alloy, 120-Alloy
2088NA	1" NPT	Nylon	118-Alloy, 120-Alloy
2087TA	¾" NPT	Teflon®	118-Alloy, 120-Alloy
2088TA	1" NPT	Teflon®	118-Alloy, 120-Alloy
2084NA	¾" NPT	Nylon	105-Alloy, 106-Alloy
2075NA	1" NPT	Nylon	105-Alloy, 106-Alloy
2084TA	¾" NPT	Teflon®	105-Alloy, 106-Alloy
2075TA	1" NPT	Teflon®	105-Alloy, 106-Alloy
2092NA	½" NPT	Nylon	100-Alloy, 103-Alloy, 115-Alloy

*A variety of plug sizes and stem lengths are available.

A DIVISION OF BAC CORROSION CONTROL
RCSL (A TRADING DIVISION OF BAC CORROSION CONTROL LTD)
STAFFORD PARK 11, TELFORD, SHROPSHIRE, TF3 3AY
T : +44 (0) 1952 290321 E : sales@rcslgroup.com W: www.rcslgroup.com
MEMBER OF MIDROC EUROPE

Cylindrical Coupons (C1018 STD)

P/N	SIZE	THREAD	SLOT
ES200	¼" x 2.5"	¼"-20 x 3/8"	1/16"
ES201 ¼" x 2"	¼" x 2"	¼"-20 x 3/8"	1/16"
ES202	¼" x 3"	¼"-20 x 3/8"	1/16"
ES204	¼" x 1½"	¼"-20 x 3/8"	1/16"

For a full range of alloys available, please contact our sales department.

Coupons can be furnished with a variety of finishes depending on your particular application. Some of the typical finishes are defined below:

- **Mill** – finish as produced from mill.
- **Glass Bead** – blasted with fine glass beads to remove mill scale.
- **120 Grit** – fine finish using a 120 grit belt and commonly used in corrosion tests, such as pitting studies, where smooth surface finish is desired. Finishes up to 800 grit (extremely fine) can be provided by using belt sanders.
- **Double Disc Ground** – extra fine finish using an abrasive disc that leaves minimal residual grit. Excellent for studies where surface finish is critical. Capable of producing 16-32 RMS finishes on common steels and 8 RMS on carbide steels.

A DIVISION OF BAC CORROSION CONTROL
RCSL (A TRADING DIVISION OF BAC CORROSION CONTROL LTD)
STAFFORD PARK 11, TELFORD, SHROPSHIRE, TF3 3AY
T : +44 (0) 1952 290321 E : sales@rcslgroup.com W: www.rcslgroup.com
MEMBER OF MIDROC EUROPE

2.6
Model 2277
Fixed Length Disc Coupon Insertion System

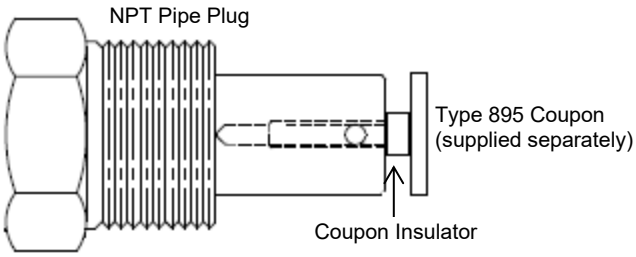

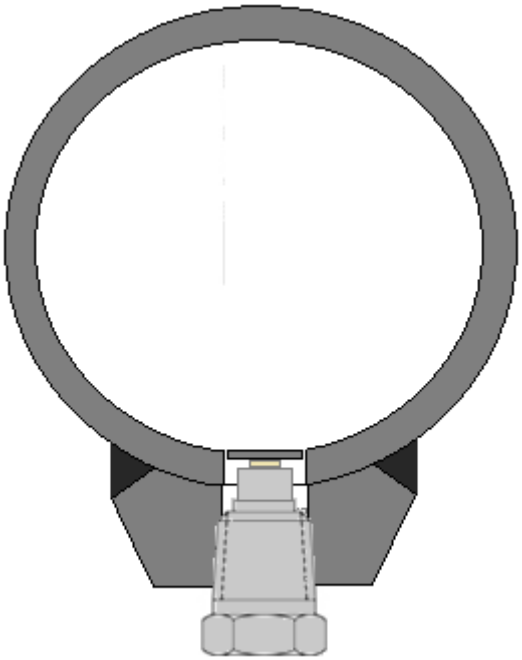

The Model 2277 is a fixed-length, thredolet-mounted, disc coupon insertion system.

Process shutdown or process isolation is required for installation and inspection. The coupon holder assembly consists of an insertion rod with integral coupon holder and Male NPT pipe plug.

Insertion length (I.L.) is calculated to the end of the coupon in this case. Customers can specify any length required.

Rose Corrosion will need to know the required length from the base of the pipe plug to the end of the coupon. This can be calculated by RCSL if required.

Materials of construction can be specified by customer. Standard body material is 316/316L S/S.

The Type 895 coupon is supplied separately. The required Type 895 disc coupon dimensions are Ø¾inch x ⅛inch. Coupon material can be specified by client.

Example coupon ordering Product Code: 895-1018, for Type 895 flush disc coupon in 1018 CS. The minimum coupon ordering quantity is 10pcs.

Model 2277 Ordering Product Code Generation Product Code: 2277-X-X-X-XXXX				
2277	**X**	**X**	**X**	**XXXX**
	| **Pipe Plug Size** 1 – ¾" NPT 2 – 1" NPT 3 – 1½" NPT 4 – 2" NPT Z – Other	| **Body Material** 1 – 316 SS 2 – Hastelloy C276 3 – UNS S31803 DSS 4 – UNS S32750 SDSS 5 – UNS S32760 SDSS 6 – UNS N06625 7 – UNS N08825 8 – 321 SS 9 – 410 SS A – UNS S32205 DSS Z – Other (Please Specify)	| **Coupon Insulator Material** 1 – Nylon 2 – PTFE Z – Other (Please Specify)	| **Order Length** 2" to 40" in 1/8" increments. Examples below: 2" = 0200 40" = 4000 2.625" = 0262

A DIVISION OF BAC CORROSION CONTROL
RCSL (A TRADING DIVISION OF BAC CORROSION CONTROL LTD)
STAFFORD PARK 11, TELFORD, SHROPSHIRE, TF3 3AY
T : +44 (0) 1952 290321 E : sales@rcslgroup.com W: www.rcslgroup.com
MEMBER OF MIDROC EUROPE

3.0
Electrical Resistance (ER) Corrosion Probes

Sub-Section No.

3.1
Model ER0250
Electrical Resistance Probe
For Atmospheric Service

Model ER0250 is a probe used to monitor corrosion in atmospheric environments. The probe consists of an element which is mounted onto an epoxy board. One side of the element is exposed to the corrosive environment while the other side is covered, acting as a reference element. The ER0250 connects to a special cable that allows it to be used with electrical resistance probe instrumentation. Replacement elements may be ordered without cable. The probe comes with a 3/16" hole for easy mounting.

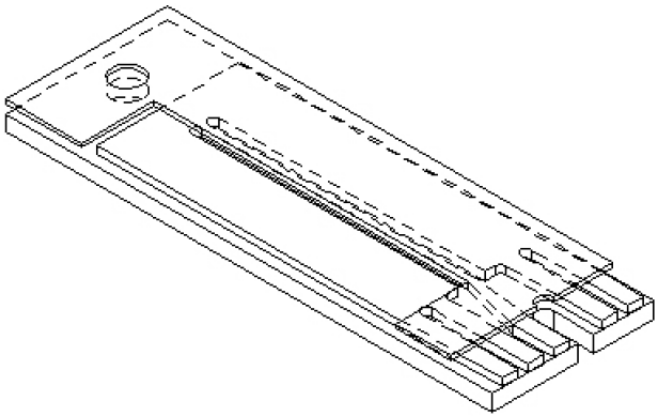

Specifications	
Probe Body	Epoxy
Temperature Rating	121°C / 250°F
Standard Element sizes	4 or 8 mils (useful range is half of thickness)

Model ER0250 Ordering Product Code Generation				
AP21	Atmospheric Probe			
	Element Thickness			
	4	4 mil thickness (2 mil useful probe life)		
	8	8 mil thickness (4 mil useful probe life)		
		Element Alloy		
		XXX	Use Code in Alloy Chart	
			Cable Length	
			0	No Cable
			10	10ft Cable
			20	20ft Cable
AP21	**8**	**375**	**20**	**Example of Probe Ordering Product Code**

Probe Element Alloy Chart					
Code	**Description**	**UNS#**	**Code**	**Description**	**UNS#**
375*	C1010**	G10100	159	316L S.S	S31603
538	5Cr 1/2Mo	K42544	A12	C276	N10276
541	9Cr 1Mo	K90941	602	Alloy 625	N06625
186	410 S.S	S41000	419	CDA110	C11000
141	304 S.S	S30400	434	CDA443	C44300

Note: Not all alloys are available with all element types and seals.
* Chemically equivalent to standard pipe grade carbon steels.

For alloys, sizes, or other special requirements not listed, please contact our sales department.

A DIVISION OF BAC CORROSION CONTROL
RCSL (A TRADING DIVISION OF BAC CORROSION CONTROL LTD)
STAFFORD PARK 11, TELFORD, SHROPSHIRE, TF3 3AY
T : +44 (0) 1952 290321 E : sales@rcslgroup.com W: www.rcslgroup.com
MEMBER OF MIDROC EUROPE

3.2
Model ER0500
Electrical Resistance Probe
For Under Ground Service

The Model ER0500 corrosion probes are designed for heavy duty service conditions such as underground and structural monitoring of pipelines, vessels, above and below ground storage tanks and structures - whether cathodically protected or not.

The surface strip element assembly is suited to the “construction site” environment.

The cylindrical element is economical and durable. Its slim profile is convenient for locations with restricted access such as concrete bridge structures and other infrastructure applications.

Both probes provide good sealing of the reference element and the check element provides confidence in the continued performance of the corrosion sensor.

Either probe may be connected to a cathodically protected structure using the attached grounding lead. This allows the probe to measure the effectiveness of the Cathodic Protection (C.P.) System under operating conditions.

If left unconnected from the structure, the probe monitors the direct corrosivity of the soil or environment. The grounding lead is installed at the connector end, unless otherwise specified. This enables connection to the C.P. System to be made as required even after probe installation.

Specifications			
	Surface Strip	Cylindrical (Standard)	Cylindrical (High-Temp)
Probe Body	PVC/ Epoxy	FRP/ Epoxy	Stainless Steel
Cable	High-Density Polyethlene Jacket Rated for Direct Burial		Teflon® FEP
Temperature Rating	176°F (80°C)		392°F (200°C)

A DIVISION OF BAC CORROSION CONTROL
RCSL (A TRADING DIVISION OF BAC CORROSION CONTROL LTD)
STAFFORD PARK 11, TELFORD, SHROPSHIRE, TF3 3AY
T : +44 (0) 1952 290321 E : sales@rcslgroup.com W: www.rcslgroup.com
MEMBER OF MIDROC EUROPE

3.2
Model ER0500
Electrical Resistance Probe
For Under Ground Service

Model ER0500 Ordering Product Code Generation					
AP	Electrical Resistance Probe				
	Type				
	31	Under ground surface strip without ground strap			
	40	Under ground cylindrical with ground strap			
	61	Under ground surface strip with ground strap			
	70	Under ground cylindrical without ground strap			
	AO	High-temperature underground cylindrical with ground strap			
		Element Thickness			
		10	10 mil thickness (5 mil useful probe life) - cylindrical or surface strip		
		20	20 mil thickness (10 mil useful probe life) - cylindrical or surface strip		
		40	40 mil thickness (20 mil useful probe life) - surface strip only		
		50	50 mil thickness (25 mil useful probe life) - cylindrical only		
			Element Alloy		
			XXX	Use Code in Alloy Chart	
				Cable Length	
				10	10ft cable
				20	20ft cable
AP	**31**	**40**	**375**	**20**	**Example of Probe Ordering Product Code**

Probe Element Alloy Chart					
Code	**Description**	**UNS#**	**Code**	**Description**	**UNS#**
375*	C1010**	G10100	159	316L S.S	S31603
538	5Cr 1/2Mo	K42544	A12	C276	N10276
541	9Cr 1Mo	K90941	602	Alloy 625	N06625
186	410 S.S	S41000	419	CDA110	C11000
141	304 S.S	S30400	434	CDA443	C44300

Note: Not all alloys are available with all element types and seals.
* For CT50 cylindrical elements use alloy code 378 instead of 375.
** Chemically equivalent to standard pipe-grade carbon steels.

For alloys, sizes, or other special requirements not listed, please contact our sales department.

Installation/Clearance Dimensions:

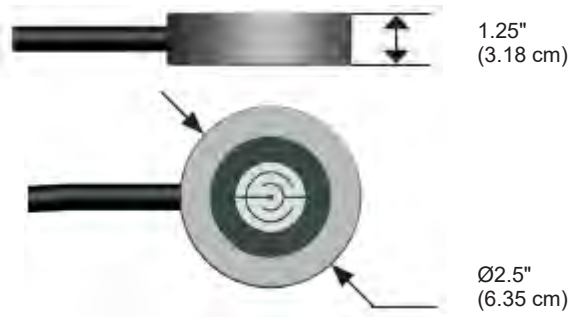

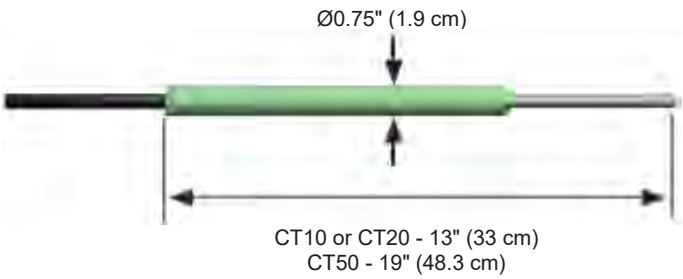

All pictures are for illustrative purposes only, supplied product may differ.

A DIVISION OF BAC CORROSION CONTROL
RCSL (A TRADING DIVISION OF BAC CORROSION CONTROL LTD)
STAFFORD PARK 11, TELFORD, SHROPSHIRE, TF3 3AY
T : +44 (0) 1952 290321 E : sales@rcslgroup.com W: www.rcslgroup.com
MEMBER OF MIDROC EUROPE

3.3
Model ER1000
Electrical Resistance Probe With Loop Element
For Direct Mounting Via ½" NPT Pipe Plug

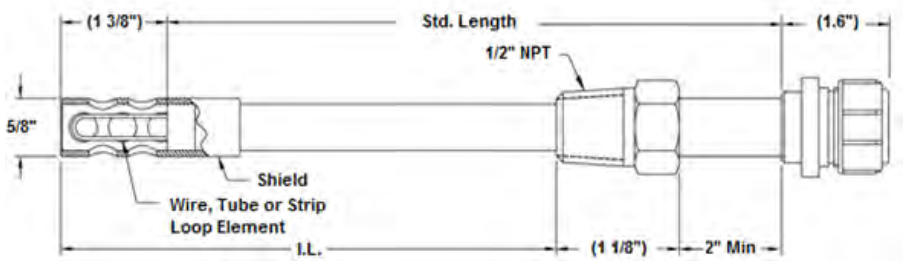

All dimensions are in inches

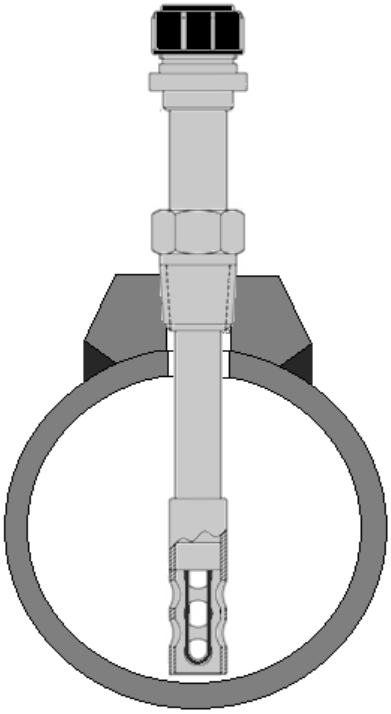

The Model ER1000 Electrical Resistance Probe is a fixed-insertion-length probe with a ½" NPT pipe plug.

The probe requires process isolation or process shutdown to install and a threaded pipe fitting to mount.

With a maximum diameter of ½", the probe is ideal for applications where space is limited.

The probe consists of an insertion rod with an element, a hermetically sealed connector, a ½" NPT fitting, and a velocity shield, which are all welded in place.

The insertion length (I.L.) is calculated to the end of the shield and can be specified by the customer. For standard probes, the maximum insertion length is given in the chart on page 2 of this data sheet.

Several standard loop elements and lengths are available to meet your specific needs. (Refer to the Element and Alloy Selection Chart for more information.)

Specifications	
Probe Body	316 Stainless Steel
Element Seal	Glass or Teflon
Fill Material	Ceramic
Temperature Rating	260°C / 500°F
Pressure Rating	3000psi / 204 Bar
Mounting	½" NPT Fitting

A DIVISION OF BAC CORROSION CONTROL
RCSL (A TRADING DIVISION OF BAC CORROSION CONTROL LTD)
STAFFORD PARK 11, TELFORD, SHROPSHIRE, TF3 3AY
T : +44 (0) 1952 290321 E : sales@rcslgroup.com W: www.rcslgroup.com
MEMBER OF MIDROC EUROPE

Model ER1000 Ordering Product Code Generation							
EP21	Electrical Resistance Probe with ½ inch NPT Pipe Plug						
	Probe Body Material						
	22	316					
	44	C276					
		E/R Element Options					
		0	WR40 Wire Loop - 40 mil thickness (10 mil useful probe life)				
		10	WR80 Wire Loop - 80 mil thickness (20 mil useful probe life)				
		20	TU04 Tube Loop - 4 mil thickness (2 mil useful probe life)				
		30	TU08 Tube Loop - 8 mil thickness (4 mil useful probe life)				
			Seal Type				
			1	Glass			
			2	Teflon®			
			3	Epoxy			
				Length			
				05	2.08 inches max. insertion length		
				08	5.08 inches max. insertion length		
				12	9.08 inches max. insertion length		
				18	15.08 inches max. insertion length		
					Element Alloy		
					XXX	Use Code in Alloy Chart	
						E/R Probe Options	
						00	No Shield
						03	Shield
EP21	**22**	**10**	**1**	**08**	**375**	**03**	**Example of Probe Ordering Product Code**

Probe Element Alloy Chart					
Code	**Description**	**UNS#**	**Code**	**Description**	**UNS#**
375*	C1010**	G10100	159	316L S.S	S31603
538	5Cr 1/2Mo	K42544	A12	C276	N10276
541	9Cr 1Mo	K90941	602	Alloy 625	N06625
186	410 S.S	S41000	419	CDA110	C11000
141	304 S.S	S30400	434	CDA443	C44300

Note: Not all alloys are available with all element types and seals.
* Chemically equivalent to standard pipe grade carbon steels.

For alloys, sizes, or other special requirements not listed, please contact our sales department.

A DIVISION OF BAC CORROSION CONTROL
RCSL (A TRADING DIVISION OF BAC CORROSION CONTROL LTD)
STAFFORD PARK 11, TELFORD, SHROPSHIRE, TF3 3AY
T : +44 (0) 1952 290321 E : sales@rcslgroup.com W: www.rcslgroup.com
MEMBER OF MIDROC EUROPE

3.4
Model ER2000
Electrical Resistance Probe With Loop Element
For Direct Mounting Via 3/4" or 1" NPT Pipe Plug

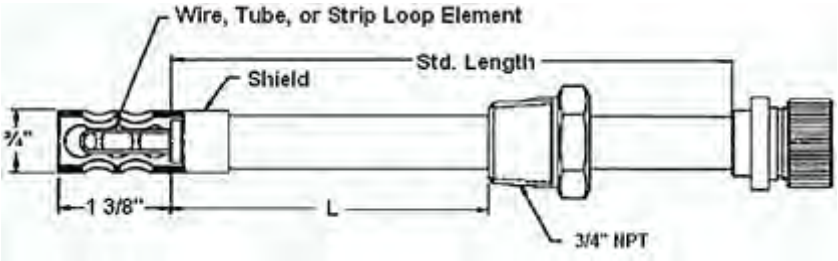

All dimensions are in inches

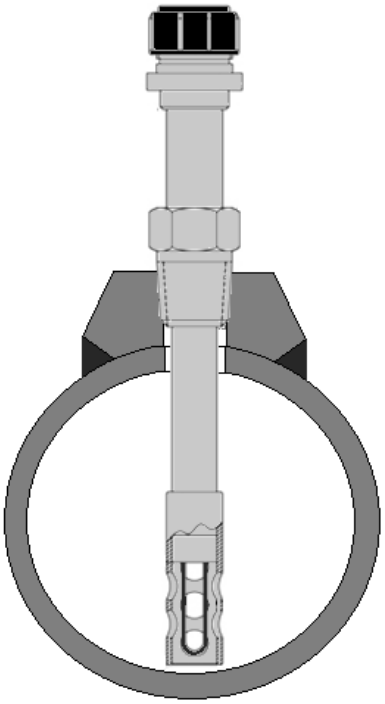

The Model ER2000 Electrical Resistance Probe is a fixed-insertion-length probe with a ¾" NPT pipe plug.

The probe requires process isolation or process shutdown to install and a threaded pipe fitting to mount.

The probe assembly consists of an insertion rod with an element, a hermetically sealed connector, a ¾" NPT fitting, which are welded in place.

A velocity shield can be provided if required.

The insertion length (I.L.) is calculated to the end of the shield and can be specified by the customer. For standard probes, the maximum insertion length is given in the chart on page 2 of this data sheet.

Several standard loop elements are available to meet your specific needs.

Specifications	
Element Seal	Glass or Teflon®
Fill Material	Ceramic or Epoxy
Temperature Rating	260°C / 500°F
Pressure Rating	3000psi / 204 Bar
Mounting	¾" NPT Fitting (please specify size required)
Probe Body	316 Stainless Steel

A DIVISION OF BAC CORROSION CONTROL
RCSL (A TRADING DIVISION OF BAC CORROSION CONTROL LTD)
STAFFORD PARK 11, TELFORD, SHROPSHIRE, TF3 3AY
T : +44 (0) 1952 290321 E : sales@rcslgroup.com W: www.rcslgroup.com
MEMBER OF MIDROC EUROPE

Model ER2000 Ordering Product Code Generation								
ER2	Electrical Resistance Fixed Length Pipe Plug Probe							
	Pipe Plug Size							
	2	¾ inch NPT Pipe Plug						
	3	1 inch NPT Pipe Plug						
		Probe Body Material						
		22	316					
		44	C276					
			E/R Element Options					
			0	WR40 Wire Loop - 40 mil thickness (10 mil useful probe life)				
			10	WR80 Wire Loop - 80 mil thickness (20 mil useful probe life)				
			20	TU04 Tube Loop - 4 mil thickness (2 mil useful probe life)				
			30	TU08 Tube Loop - 8 mil thickness (4 mil useful probe life)				
			80	SL05 Strip Loop - 5 mil thickness (1.25 mil useful probe life)				
			90	SL05 Strip Loop - 10 mil thickness (2.5 mil useful probe life)				
				Seal Type				
				1	Glass			
				2	Teflon			
				3	Epoxy			
					Length			
					06	4.13 inches max. insertion length		
					08	6.13 inches max. insertion length		
					12	10.13 inches max. insertion length		
					18	16.13 inches max. insertion length		
						Element Alloy		
						XXX	Use Code in Alloy Chart	
							E/R Probe Options	
							00	No Shield
							03	Shield
ER2	**2**	**22**	**10**	**1**	**08**	**375**	**03**	**Example of Probe Ordering Product Code**

Probe Element Alloy Chart					
Code	**Description**	**UNS#**	**Code**	**Description**	**UNS#**
375*	C1010**	G10100	159	316L S.S	S31603
538	5Cr 1/2Mo	K42544	A12	C276	N10276
541	9Cr 1Mo	K90941	602	Alloy 625	N06625
186	410 S.S	S41000	419	CDA110	C11000
141	304 S.S	S30400	434	CDA443	C44300

Note: Not all alloys are available with all element types and seals.
* Chemically equivalent to standard pipe grade carbon steels.

For alloys, sizes, or other special requirements not listed, please contact our sales department.

A DIVISION OF BAC CORROSION CONTROL
RCSL (A TRADING DIVISION OF BAC CORROSION CONTROL LTD)
STAFFORD PARK 11, TELFORD, SHROPSHIRE, TF3 3AY
T : +44 (0) 1952 290321 E : sales@rcslgroup.com W: www.rcslgroup.com
MEMBER OF MIDROC EUROPE

3.5
Model ER2100
Electrical Resistance Probe With Cylindrical Element
For Direct Mounting Via 3/4" or 1" NPT Pipe Plug

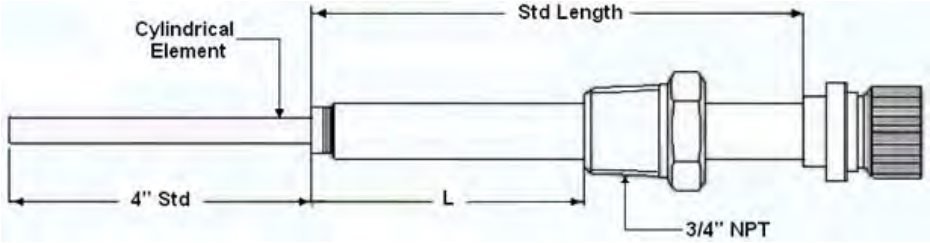

All dimensions are in inches

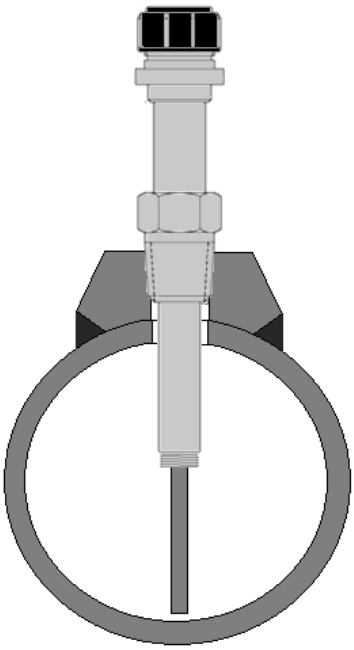

The Model ER2100 is a fixed-length, electrical resistance probe with a ¾" or 1" NPT pipe plug. The probe requires process isolation or process shutdown to install and a threaded pipe fitting to mount.

The all-welded construction allows the probe to be used in harsh environments.

The probe assembly consists of an insertion rod with an element, a hermetically sealed connector, and a ¾" or 1" NPT fitting, which are all welded in place. A velocity shield can be provided if required.

The insertion length (I.L.) is calculated to the end of the shield or to the end of the element if a shield is not present. Probe length can be specified by the customer. For standard probes, the maximum insertion length is given in the chart on page 2.

Several standard elements are available to meet your specific needs.

Specifications	
Probe Body	316 Stainless Steel
Element Seal	Welded
Fill Material	Ceramic
Temperature Rating	260°C / 500°F
Pressure Rating	3000 psi / 204 Bar
Mounting	¾" or 1" NPT Fitting

A DIVISION OF BAC CORROSION CONTROL
RCSL (A TRADING DIVISION OF BAC CORROSION CONTROL LTD)
STAFFORD PARK 11, TELFORD, SHROPSHIRE, TF3 3AY
T : +44 (0) 1952 290321 E : sales@rcslgroup.com W: www.rcslgroup.com
MEMBER OF MIDROC EUROPE

3.5
Model ER2100
Electrical Resistance Probe With Cylindrical Element
For Direct Mounting Via 3/4" or 1" NPT Pipe Plug

Model ER2100 Ordering Product Code Generation							
ER2	Electrical Resistance Fixed Length Pipe Plug Probe						
	Pipe Plug Size						
	2	¾ inch NPT Pipe Plug					
	3	1 inch NPT Pipe Plug					
		Probe Body Material					
		22	316				
		44	C276				
			E/R Element Options				
			500	CT10 Cylindrical - 10 mil thickness (5 mil useful probe life)			
			600	CT20 Cylindrical - 20 mil thickness (10 mil useful probe life)			
			700	CT50 Cylindrical - 50 mil thickness (25 mil useful probe life)			
				Length			
				06	7.38 inches max. insertion length		
				08	9.38 inches max. insertion length		
				12	13.38 inches max. insertion length		
				18	19.38 inches max. insertion length		
					Element Alloy		
					XXX	Use Code in Alloy Chart	
						E/R Probe Options	
						00	No Shield
						03	Shield
ER2	**2**	**22**	**500**	**08**	**375**	**03**	**Example of Probe Ordering Product Code**

Probe Element Alloy Chart					
Code	**Description**	**UNS#**	**Code**	**Description**	**UNS#**
375*	C1010**	G10100	159	316L S.S	S31603
538	5Cr 1/2Mo	K42544	A12	C276	N10276
541	9Cr 1Mo	K90941	602	Alloy 625	N06625
186	410 S.S	S41000	419	CDA110	C11000
141	304 S.S	S30400	434	CDA443	C44300

Note: Not all alloys are available with all element types and seals.
* Chemically equivalent to standard pipe grade carbon steels.

For alloys, sizes, or other special requirements not listed, please contact our sales department.

A DIVISION OF BAC CORROSION CONTROL
RCSL (A TRADING DIVISION OF BAC CORROSION CONTROL LTD)
STAFFORD PARK 11, TELFORD, SHROPSHIRE, TF3 3AY
T : +44 (0) 1952 290321 E : sales@rcslgroup.com W: www.rcslgroup.com
MEMBER OF MIDROC EUROPE

3.6
Model ER3000
Adjustable Electrical Resistance Probe With Loop Element
For Direct Mounting Via 3/4" or 1" NPT Pipe Plug

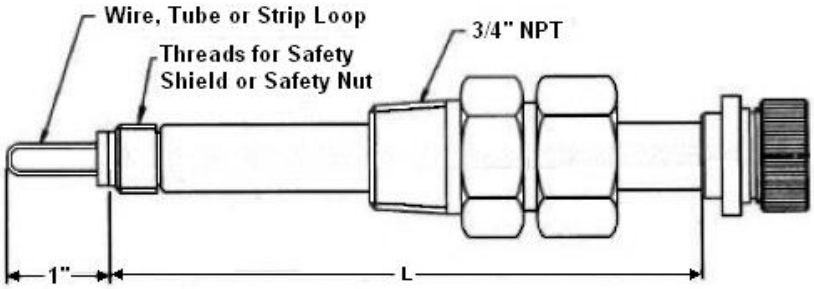

All Dimensions are in inches

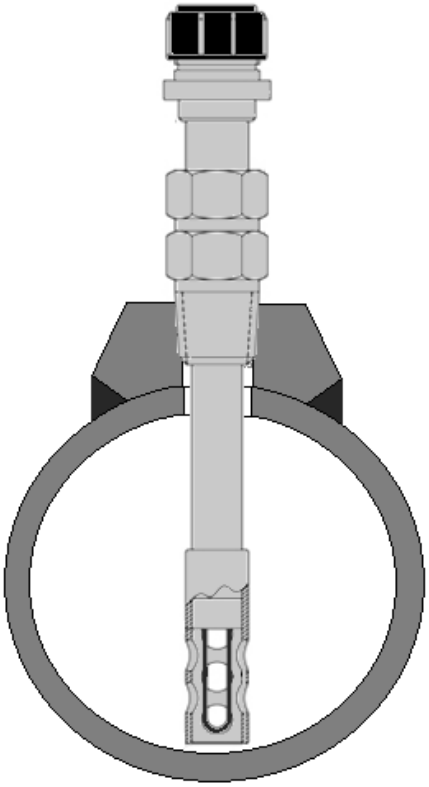

The Model ER3000 is an adjustable-length, electrical resistance probe with a 3/4" NPT compression fitting. The compression fitting allows the probe to be inserted into the process to the required length.

The probe requires process isolation or process shutdown to install and a threaded pipe fitting to mount.

The probe consists of an insertion rod with an element, a hermetically sealed connector, a 3/4" compression fitting, and a safety nut to prevent blow out.

A velocity shield can be added to the assembly if required.

Several standard elements are available to meet your specific needs.

Specifications	
Probe Body	316 Stainless Steel
Element Seal	Glass or Teflon®
Fill Material	Ceramic
Temperature Rating	260°C / 500°F
Pressure Rating	1500psi / 102 Bar
Mounting	¾" or 1" NPT Fitting

A DIVISION OF BAC CORROSION CONTROL
RCSL (A TRADING DIVISION OF BAC CORROSION CONTROL LTD)
STAFFORD PARK 11, TELFORD, SHROPSHIRE, TF3 3AY
T : +44 (0) 1952 290321 E : sales@rcslgroup.com W: www.rcslgroup.com
MEMBER OF MIDROC EUROPE

3.6
Model ER3000
Adjustable Electrical Resistance Probe With Loop Element
For Direct Mounting Via 3/4" or 1" NPT Pipe Plug

Model ER3000 Ordering Product Code Generation								
ER3	Electrical Resistance Adjustable Pipe Plug Probe							
	Pipe Plug Size							
	2	¾ inch NPT Pipe Plug						
	3	1 inch NPT Pipe Plug						
		Probe Body Material						
		22	316					
		44	C276					
			E/R Element Options					
			0	WR40 Wire Loop - 40 mil thickness (10 mil useful probe life)				
			10	WR80 Wire Loop - 80 mil thickness (20 mil useful probe life)				
			20	TU04 Tube Loop - 4 mil thickness (2 mil useful probe life)				
			30	TU08 Tube Loop - 8 mil thickness (4 mil useful probe life)				
			80	SL05 Strip Loop - 5 mil thickness (1.25 mil useful probe life)				
			90	SL10 Tube Loop - 10 mil thickness (2.5 mil useful probe life)				
			A0	FS04 Flush Mount Small - 4 mil thickness (2 mil useful probe life)				
				Seal Type				
				1	Glass			
				2	Teflon®			
				3	Epoxy			
					Length			
					06	5.33 inches max. insertion length		
					08	7.33 inches max. insertion length		
					12	11.33 inches max. insertion length		
					18	17.33 inches max. insertion length		
						Element Alloy		
						XXX	Use Code in Alloy Chart	
							E/R Probe Options	
							00	No Shield
							03	Shield
ER3	**2**	**22**	**10**	**1**	**08**	**375**	**03**	**Example of Probe Ordering Product Code**

Probe Element Alloy Chart					
Code	**Description**	**UNS#**	**Code**	**Description**	**UNS#**
375*	C1010**	G10100	159	316L S.S	S31603
538	5Cr 1/2Mo	K42544	A12	C276	N10276
541	9Cr 1Mo	K90941	602	Alloy 625	N06625
186	410 S.S	S41000	419	CDA110	C11000
141	304 S.S	S30400	434	CDA443	C44300

Note: Not all alloys are available with all element types and seals.
* Chemically equivalent to standard pipe grade carbon steels.

For alloys, sizes, or other special requirements not listed, please contact our sales department.

A DIVISION OF BAC CORROSION CONTROL
RCSL (A TRADING DIVISION OF BAC CORROSION CONTROL LTD)
STAFFORD PARK 11, TELFORD, SHROPSHIRE, TF3 3AY
T : +44 (0) 1952 290321 E : sales@rcslgroup.com W: www.rcslgroup.com
MEMBER OF MIDROC EUROPE

3.7
Model ER3100
Adjustable Electrical Resistance Probe With Cylindrical Element
For Direct Mounting Via 3/4" or 1" NPT Pipe Plug

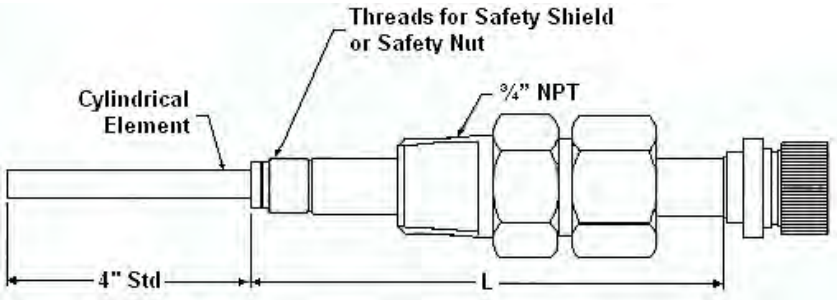

All dimensions are in inches

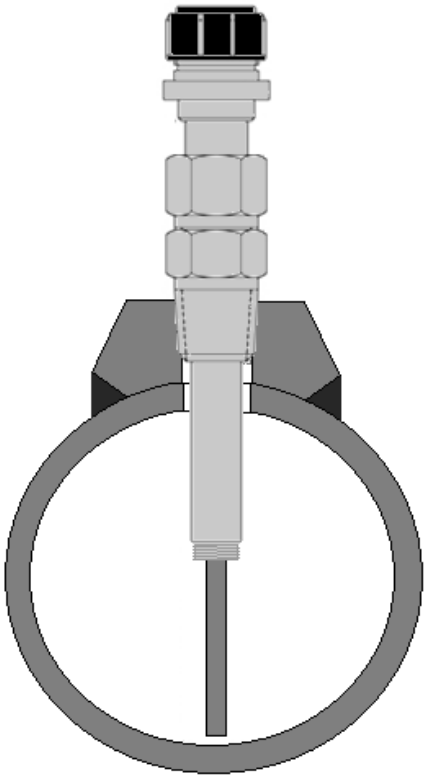

The Model ER3100 is an adjustable-length, electrical resistance probe with a ¾" or 1" NPT compression fitting. The compression fitting allows the probe to be inserted into the process to the required length.

The probe requires process isolation or process shutdown to install and a threaded pipe fitting to mount.

The all-welded construction allows the probe to be used in harsh environments.

The probe assembly consists of an insertion rod with an element, a hermetically sealed connector welded in place, a ¾" or 1" compression fitting, and a safety nut to prevent blow out. A velocity shield can be added to the assembly if required.

The insertion length (I.L.) is calculated to the end of the shield or to the end of the element if a shield is not present. Probe length can be specified by the customer. For standard probes, the maximum insertion length is given in the chart on page 2 of this data sheet.

Several standard elements are available to meet your specific needs.

Specifications	
Probe Body	316 Stainless Steel
Element Seal	Welded
Fill Material	Ceramic
Temperature Rating	260°C / 500°F
Pressure Rating	1500psi / 102 Bar
Mounting	¾" NPT Fitting

A DIVISION OF BAC CORROSION CONTROL
RCSL (A TRADING DIVISION OF BAC CORROSION CONTROL LTD)
STAFFORD PARK 11, TELFORD, SHROPSHIRE, TF3 3AY
T : +44 (0) 1952 290321 E : sales@rcslgroup.com W: www.rcslgroup.com
MEMBER OF MIDROC EUROPE

Model ER3100

Adjustable Electrical Resistance Probe With Cylindrical Element

For Direct Mounting Via 3/4" or 1" NPT Pipe Plug

Model ER3100 Ordering Product Code Generation							
ER3	Electrical Resistance Adjustable Length Pipe Plug Probe						
	Pipe Plug Size						
	2	¾ inch NPT Pipe Plug					
	3	1 inch NPT Pipe Plug					
		Probe Body Material					
		22	316				
		44	C276				
			E/R Element Options				
			500	CT10 Cylindrical - 10 mil thickness (5 mil useful probe life)			
			600	CT20 Cylindrical - 20 mil thickness (10 mil useful probe life)			
			700	CT50 Cylindrical - 50 mil thickness (25 mil useful probe life)			
				Insertion Length			
				06	8.58 inches max. insertion length		
				08	10.58 inches max. insertion length		
				12	14.58 inches max. insertion length		
				18	20.58 inches max. insertion length		
					Element Alloy		
					XXX	Use Code in Alloy Chart	
						E/R Probe Options	
						00	No Shield
						03	Shield
ER3	**2**	**22**	**500**	**8**	**375**	**03**	**Example of Probe Ordering #**

Probe Element Alloy Chart					
Code	**Description**	**UNS#**	**Code**	**Description**	**UNS#**
375*	C1010**	G10100	159	316L S.S	S31603
538	5Cr 1/2Mo	K42544	A12	C276	N10276
541	9Cr 1Mo	K90941	602	Alloy 625	N06625
186	410 S.S	S41000	419	CDA110	C11000
141	304 S.S	S30400	434	CDA443	C44300

Note: Not all alloys are available with all element types and seals.
* Chemically equivalent to standard pipe grade carbon steels.

For alloys, sizes, or other special requirements not listed, please contact our sales department.

A DIVISION OF BAC CORROSION CONTROL
RCSL (A TRADING DIVISION OF BAC CORROSION CONTROL LTD)
STAFFORD PARK 11, TELFORD, SHROPSHIRE, TF3 3AY
T : +44 (0) 1952 290321 E : sales@rcslgroup.com W: www.rcslgroup.com
MEMBER OF MIDROC EUROPE

3.8
Model ER3110
Adjustable Electrical Resistance Probe With Cylindrical Element
Non Metallic Probe Body & 3/4" NPT Pipe Plug

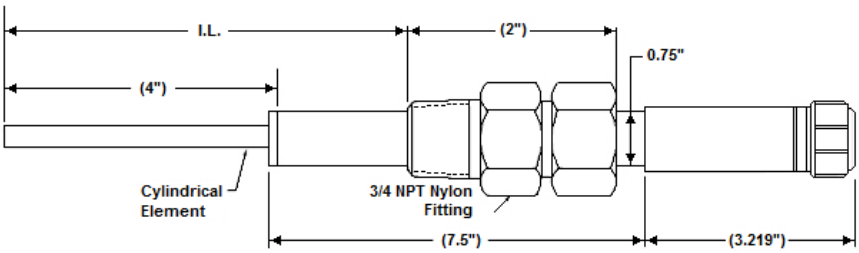

All dimensions are in inches

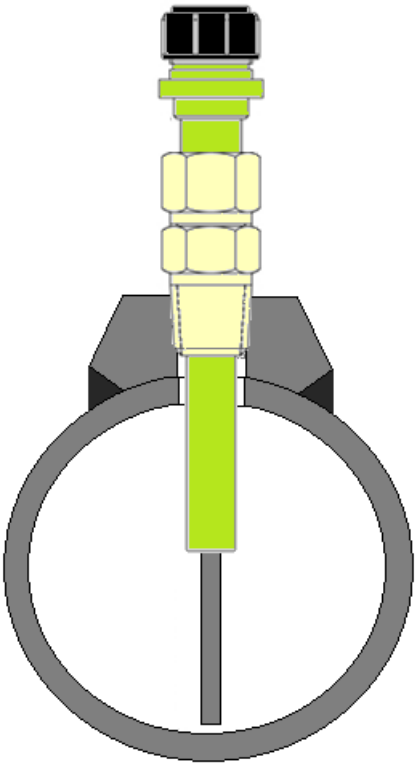

Model ER3110 is an adjustable-length, electrical resistance probe with a ¾" NPT compression fitting and a non-metallic probe body.

The compression fitting allows the probe to be inserted into the process to the required length. The non-metallic body provides electrical isolation between the probe element and the vessel.

This can be useful in systems where galvanic problems and stray currents may cause accelerated corrosion of the probe element, causing an over-estimation of the system's corrosion rate.

The probe requires process isolation or process shutdown to install and a threaded pipe fitting to mount.

The probe assembly consists of an epoxy-filled insertion rod with an element, a 6-pin connector, and a ¾" compression fitting. The insertion length (I.L.) is calculated to the end of the element. The maximum insertion length (I.L.) is 9.5".

Several standard elements are available to meet your specific needs.

Specifications	
Probe Body	Glass Epoxy
Element Seal	Epoxy
Fill Material	Epoxy
Temperature Rating (with Nylon Compression Fitting)	65°C / 150°F
Pressure Rating	100psi / 7 Bar
Mounting	¾" NPT Pipe Plug

A DIVISION OF BAC CORROSION CONTROL
RCSL (A TRADING DIVISION OF BAC CORROSION CONTROL LTD)
STAFFORD PARK 11, TELFORD, SHROPSHIRE, TF3 3AY
T : +44 (0) 1952 290321 E : sales@rcslgroup.com W: www.rcslgroup.com
MEMBER OF MIDROC EUROPE

Model ER3110 Ordering Product Code Generation							
ER3	Electrical Resistance Adjustable Length Pipe Plug Probe						
	Pipe Plug Size						
	2	¾" NPT Pipe Plug					
		Probe Body Material					
		7E	Epoxy				
			ER Element Options				
			503	CT10 Cylindrical – 10 mil thickness (5 mil useful probe life)			
			603	CT20 Cylindrical – 20 mil thickness (10 mil useful probe life)			
			703	CT50 Cylindrical – 50 mil thickness (25 mil useful probe life)			
				Length			
				11	9.5" max. insertion length		
					Element Alloy		
					XXX	Use Code in Alloy Chart	
						ER Probe Options	
						00	None
ER3	**2**	**7E**	**503**	**11**	**375**	**00**	**Example of Probe Ordering #**

Probe Element Alloy Chart					
Code	**Description**	**UNS#**	**Code**	**Description**	**UNS#**
375*	C1010**	G10100	159	316L S.S	S31603
538	5Cr 1/2Mo	K42544	A12	C276	N10276
541	9Cr 1Mo	K90941	602	Alloy 625	N06625
186	410 S.S	S41000	419	CDA110	C11000
141	304 S.S	S30400	434	CDA443	C44300

Note: Not all alloys are available with all element types and seals.
* Chemically equivalent to standard pipe grade carbon steels.

For alloys, sizes, or other special requirements not listed, please contact our sales department.

A DIVISION OF BAC CORROSION CONTROL
RCSL (A TRADING DIVISION OF BAC CORROSION CONTROL LTD)
STAFFORD PARK 11, TELFORD, SHROPSHIRE, TF3 3AY
T : +44 (0) 1952 290321 E : sales@rcslgroup.com W: www.rcslgroup.com
MEMBER OF MIDROC EUROPE

3.9
Model ER3200
Adjustable Electrical Resistance Probe With Flush Element
For Direct Mounting Via 1½" NPT Pipe Plug

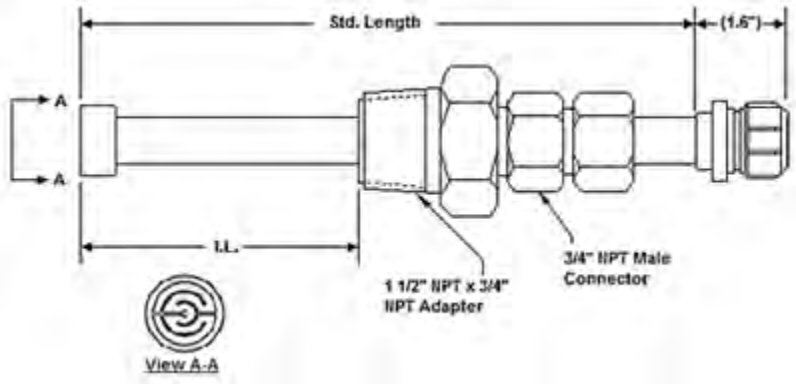

All dimensions are in inches

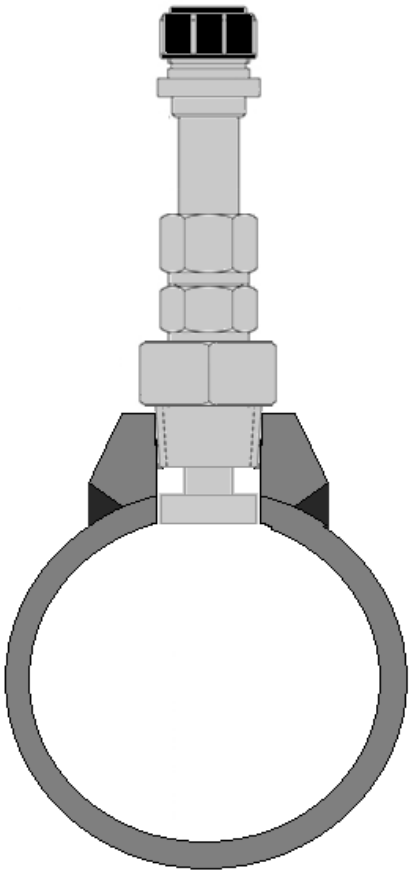

The Model ER3200 is an adjustable-length, electrical resistance probe with a ¾" NPT compression fitting combined with a ¾" to 1½" adapter. The compression fitting allows the probe to be inserted into the process to the required length.

The probe requires process isolation or process shutdown to install and a threaded pipe fitting to mount.

The probe assembly consists of an insertion rod with an element, a hermetically sealed connector welded in place, a ¾" compression fitting, and a ¾" to 1½" adapter. The adapter cannot be removed from the compression fitting.

The insertion length (I.L.) is calculated to the end of the element. Probe length can be specified by the customer. For standard probes, the maximum insertion length is given in the chart on page 2 of this data sheet.

Several standard elements are available to meet your specific needs.

Specifications	
Probe Body	316 Stainless Steel
Element Seal	Epoxy
Fill Material	Epoxy
Temperature Rating	260°C / 500°F
Pressure Rating	1500psi / 102 Bar
Mounting	1½" NPT Fitting

A DIVISION OF BAC CORROSION CONTROL
RCSL (A TRADING DIVISION OF BAC CORROSION CONTROL LTD)
STAFFORD PARK 11, TELFORD, SHROPSHIRE, TF3 3AY
T : +44 (0) 1952 290321 E : sales@rcslgroup.com W: www.rcslgroup.com
MEMBER OF MIDROC EUROPE

3.9
Model ER3200
Adjustable Electrical Resistance Probe With Flush Element
For Direct Mounting Via 1½" NPT Pipe Plug

Model ER3200 Ordering Product Code Generation							
ER3	Electrical Resistance Adjustable Length Pipe Plug Probe						
	Pipe Plug Size						
	7	1½" NPT Pipe Plug					
		Probe Body Material					
		22	316				
		44	C276				
			ER Element Options				
			C03	FL05 Flush Mount – 5 mil thickness (2.5 mil useful probe life)			
			D03	FL10 Flush Mount – 10 mil thickness (5 mil useful probe life)			
			E03	FL20 Flush Mount – 20 mil thickness (10 mil useful probe life)			
			F03	FL40 Flush Mount – 40 mil thickness (20 mil useful probe life)			
				Length			
				06	3 inches max. insertion length		
				08	5 inches max. insertion length		
				12	9 inches max. insertion length		
				18	15 inches max. insertion length		
					Element Alloy		
					XXX	Use Code in Alloy Chart	
						ER Probe Options	
						00	No Shield
ER3	**7**	**22**	**C03**	**08**	**375**	**00**	**Example of Probe Ordering Product Code**

Probe Element Alloy Chart					
Code	**Description**	**UNS#**	**Code**	**Description**	**UNS#**
375*	C1010**	G10100	159	316L S.S	S31603
538	5Cr 1/2Mo	K42544	A12	C276	N10276
541	9Cr 1Mo	K90941	602	Alloy 625	N06625
186	410 S.S	S41000	419	CDA110	C11000
141	304 S.S	S30400	434	CDA443	C44300

Note: Not all alloys are available with all element types and seals.
* Chemically equivalent to standard pipe grade carbon steels.

For alloys, sizes, or other special requirements not listed, please contact our sales department.

A DIVISION OF BAC CORROSION CONTROL
RCSL (A TRADING DIVISION OF BAC CORROSION CONTROL LTD)
STAFFORD PARK 11, TELFORD, SHROPSHIRE, TF3 3AY
T : +44 (0) 1952 290321 E : sales@rcslgroup.com W: www.rcslgroup.com
MEMBER OF MIDROC EUROPE

3.10
Model ER4000
Retractable Electrical Resistance Probe With Loop Element
For The Low Pressure Retractable System

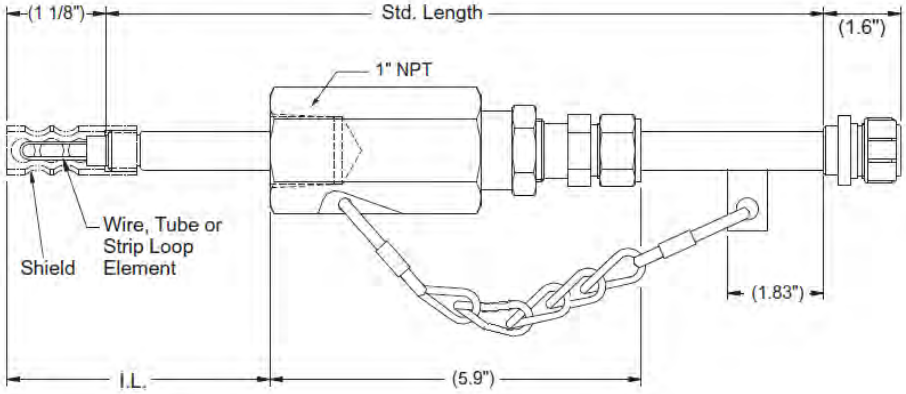

All dimensions are in inches

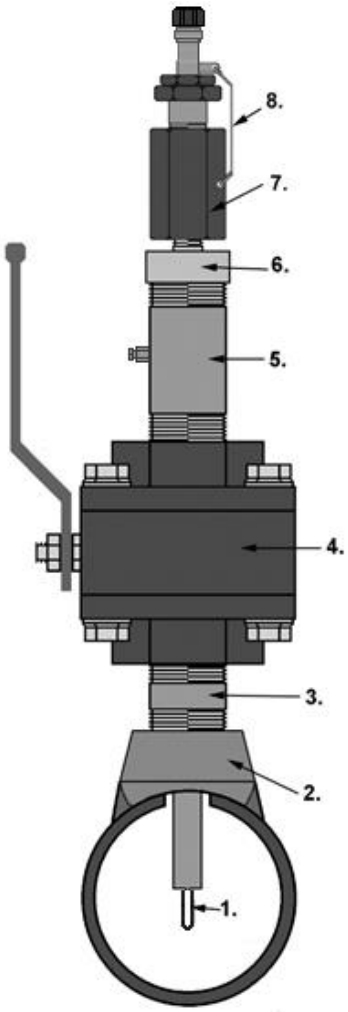

Picture is for illustrative purposes only, flanged connection is also available

The Model ER4000 is a retractable, electrical resistance probe commonly used in field and plant applications. A specially designed packing gland is used with the probe for insertion into or retraction from a pressurized system without a process shutdown. Standard packing material in the packing gland is Teflon®. Grafoil packing can be provided if required.

When the probe element requires replacement, the packing gland assembly may be reused. The probe is designed to mount onto a 1" piping system, but can easily be adapted to fit your specific requirements.

The probe assembly consists of a replaceable insertion rod with an element, a hermetically sealed connector welded in place, and a packing gland. A safety chain and safety nut are also provided to prevent blowout. A velocity shield can be added to the assembly if required.

Key	
1 – Probe Element 2 – Thredo-let (flanged connection is available) 3 – TBE Pipe Nipple 4 – Full Bore Ball Valve (flanged connection is available)	5 – TBE Pipe Nipple (usually fitted with bleed valve) 6 – Thread adaptor (if required) 7 – Packing gland 8 – Safety chain Items 1-6 are supplied separately from the ER4000

The insertion length (I.L.) is calculated to the end of the shield or to the end of the element if a shield is not present. Probe length can be specified by the customer. For standard probes, the maximum insertion length is given in the chart below. Several standard elements are available to meet your specific needs.

Specifications				
Probe Body Material	316 Stainless Steel*		Order Length	I.L. (max)
Element Seal	Glass or Teflon		24"	17.6"
Fill Material	Ceramic		30"	23.6"
Temperature Rating	260°C / 500°F Teflon®		36"	29.6"
Pressure Rating	2000 PSI / 138 Barg**		42"	35.6"
Mounting	Minimum 1" Full Bore Valve			

* Other material options are available

** Easy Tool (Product Code: SR2159-ERXX) is recommended for insertion or retraction in systems with pressure over 150 psi

A DIVISION OF BAC CORROSION CONTROL
RCSL (A TRADING DIVISION OF BAC CORROSION CONTROL LTD)
STAFFORD PARK 11, TELFORD, SHROPSHIRE, TF3 3AY
T : +44 (0) 1952 290321 E : sales@rcslgroup.com W: www.rcslgroup.com
MEMBER OF MIDROC EUROPE

3.10
Model ER4000
Retractable Electrical Resistance Probe With Loop Element
For The Low Pressure Retractable System

Model ER4000 Ordering Product Code Generation								
ER45	Electrical Resistance 1 inch Female NPT Probe, Packing Gland with Teflon®							
ER75	Electrical Resistance 1 inch Female NPT Probe, Packing Gland with Grafoil®							
ER00	Electrical Resistance Replacement Insertion Rod							
	Probe Body Material							
	2	316						
	4	C276						
		Packing Gland Material						
		0	N/A (replacement insertion rod)					
		2	316					
		4	C276					
			E/R Element Options					
			00	WR40 Wire Loop - 40 mil thickness (10 mil useful probe life)				
			10	WR80 Wire Loop - 80 mil thickness (20 mil useful probe life)				
			20	TU04 Tube Loop - 4 mil thickness (2 mil useful probe life)				
			30	TU08 Tube Loop - 8 mil thickness (4 mil useful probe life)				
			40	TU16 Tube Loop - 16 mil thickness (8 mil useful probe life)				
			80	SL05 Strip Loop - 5 mil thickness (1.25 mil useful probe life)				
			90	SL10 Strip Loop - 10 mil thickness (2.5 mil useful probe life)				
				Seal Type				
				1	Glass			
				2	Teflon®			
				3	Epoxy			
					Length			
					24	17.60 inches max. insertion length		
					30	23.60 inches max. insertion length		
					36	29.60 inches max. insertion length		
					42	35.60 inches max. insertion length		
						Element Alloy		
						XXX	Use Code in Alloy Chart	
							E/R Probe Options	
							00	No Shield
							01	Shield, Coupon adapter (118), hardware
							02	Shield, Coupon adapter (220), hardware
							03	Shield
ER45	**2**	**2**	**10**	**1**	**36**	**375**	**02**	**Example of Probe Ordering Product Code**

Probe Element Alloy Chart					
Code	**Description**	**UNS#**	**Code**	**Description**	**UNS#**
375*	C1010*	G10100	159	316L S.S	S31603
538	5Cr 1/2Mo	K42544	A12	C276	N10276
541	9Cr 1Mo	K90941	602	Alloy 625	N06625
186	410 S.S	S41000	419	CDA110	C11000
141	304 S.S	S30400	434	CDA443	C44300

Note: Not all alloys are available with all element types and seals.
* Chemically equivalent to standard pipe-grade carbon steels.

For alloys, sizes, or other special requirements not listed, please contact our sales department.

Safety clamps are available separately, these provide additional support to the packing gland and safety chain to control the positioning of the coupons within the pipe.

Safety Clamp Assembly Product Code:	
PS5463141**XX**	Replace XX with Length, e.g. PS5463141**24**

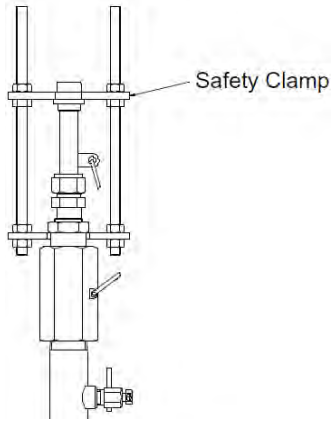

A DIVISION OF BAC CORROSION CONTROL
RCSL (A TRADING DIVISION OF BAC CORROSION CONTROL LTD)
STAFFORD PARK 11, TELFORD, SHROPSHIRE, TF3 3AY
T : +44 (0) 1952 290321 E : sales@rcslgroup.com W: www.rcslgroup.com
MEMBER OF MIDROC EUROPE

3.11
Model ER4100
Retractable Electrical Resistance Probe With Cylindrical Element
For The Low Pressure Retractable System

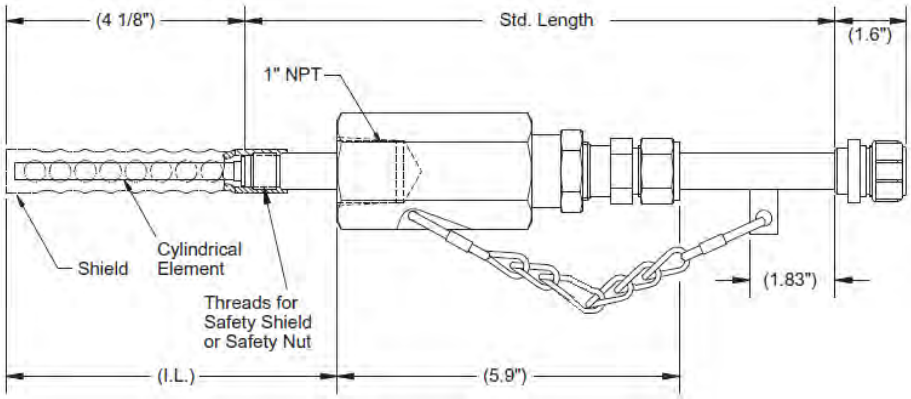

All dimensions are in inches

The Model ER4100 is a retractable, electrical resistance probe commonly used in field and plant applications. The all-welded design allows the probe to be used in harsh environments. A specially designed packing gland is used with the probe for insertion into or retraction from a pressurised system without a process shutdown. Standard packing material in the packing gland is Teflon®, however, grafoil packing can be provided for high temperature applications*.

When the probe element requires replacement, the packing gland assembly may be reused. The probe is designed to mount onto a 1" piping system, but can easily be adapted to fit your specific requirements.

The probe assembly consists of a replaceable insertion rod with an element, a hermetically sealed connector welded in place, and a packing gland. A safety chain and safety nut are also provided to prevent blowout. A velocity shield can be added to the assembly if required.

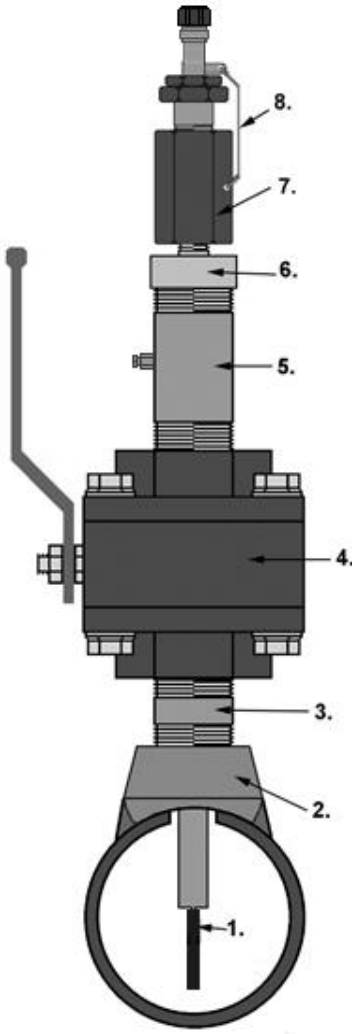

Picture is for illustrative purposes only, flanged connection is also available

Key	
1 – Probe Element	5 – TBE Pipe Nipple (usually fitted with bleed valve)
2 – Thredo-let (flanged connection is available)	6 – Thread adaptor (if required)
3 – TBE Pipe Nipple	7 – Packing gland
4 – Full Bore Ball Valve (flanged connection is available)	8 – Safety chain
	Items 1-6 are supplied separately from the ER4100

The insertion length (I.L.) is calculated to the end of the shield or to the end of the element if a shield is not present. Probe length can be specified by the customer. For standard probes, the maximum insertion length is given in the chart below. Several standard elements are available to meet your specific needs.

Specifications				
Probe Body Material	316 Stainless Steel**		Order Length	I.L. (max)
Element Seal	Glass or Teflon		24"	20.85"
Fill Material	Ceramic		30"	26.85"
Temperature Rating	260°C / 500°F Teflon®		36"	32.85"
Temperature Rating	454°C / 850°F Grafoil*		42"	38.85"
Pressure Rating	2000 PSI / 138 Barg***			
Mounting	Minimum 1" Full Bore Valve			

* High temperature applications may require the use of a high temperature element, please contact sales.
** Other material options are available
*** Easy Tool (Product Code: SR2159-ERXX) is recommended for insertion or retraction in systems with pressure over 150 psi

A DIVISION OF BAC CORROSION CONTROL
RCSL (A TRADING DIVISION OF BAC CORROSION CONTROL LTD)
STAFFORD PARK 11, TELFORD, SHROPSHIRE, TF3 3AY
T : +44 (0) 1952 290321 E : sales@rcslgroup.com W: www.rcslgroup.com
MEMBER OF MIDROC EUROPE

Model ER4100 Ordering Product Code Generation							
ER45	Electrical Resistance 1 inch Female NPT Probe, Packing Gland with Teflon®						
ER75	Electrical Resistance 1 inch NPT Probe, Packing Gland with Grafoi®l, High Temperature						
ER00	Electrical Resistance Replacement Insertion Rod						
ER05	Electrical Resistance Replacement Insertion Rod, High Temperature						
	Probe Body Material						
	2	316					
	4	C276					
		Packing Gland Material					
		0	N/A (replacement insertion rod)				
		2	316				
		4	C276				
			E/R Element Options				
			500	CT10 Cylindrical - 10 mil thickness (5 mil useful probe life)			
			600	CT20 Cylindrical - 20 mil thickness (10 mil useful probe life)			
			700	CT50 Cylindrical - 50 mil thickness (25 mil useful probe life)			
				Length			
				24	20.85 inches max. insertion length		
				30	26.85 inches max. insertion length		
				36	32.85 inches max. insertion length		
				42	38.85 inches max. insertion length		
					Element Alloy		
					XXX	Use Code in Alloy Chart	
						E/R Probe Options	
						00	No Shield
						01	Shield, Coupon adapter (118), hardware
						02	Shield, Coupon adapter (220), hardware
						03	Shield
ER45	**2**	**2**	**700**	**36**	**375**	**02**	**Example of Probe Ordering Product Code**

Probe Element Alloy Chart					
Code	**Description**	**UNS#**	**Code**	**Description**	**UNS#**
375*	C1010*	G10100	159	316L S.S	S31603
538	5Cr 1/2Mo	K42544	A12	C276	N10276
541	9Cr 1Mo	K90941	602	Alloy 625	N06625
186	410 S.S	S41000	419	CDA110	C11000
141	304 S.S	S30400	434	CDA443	C44300

Note: Not all alloys are available with all element types and seals.
* Chemically equivalent to standard pipe-grade carbon steels.

For alloys, sizes, or other special requirements not listed, please contact our sales department.

Safety clamps are available separately, these provide additional support to the packing gland and safety chain to control the positioning of the coupons within the pipe.

Safety Clamp Assembly Product Code:	
PS5463141**XX**	Replace XX with Length, e.g. PS5463141**24**

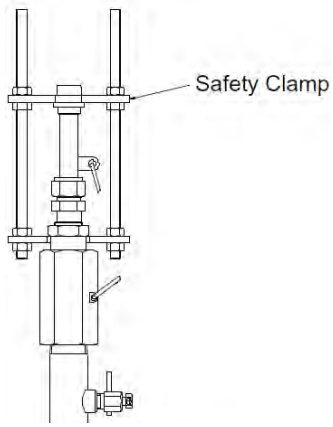

RCSL (A TRADING DIVISION OF BAC CORROSION CONTROL LTD)
STAFFORD PARK 11, TELFORD, SHROPSHIRE, TF3 3AY
T : +44 (0) 1952 290321 E : sales@rcslgroup.com W: www.rcslgroup.com

3.12
Model ER4200
Retractable Electrical Resistance Probe With Small Flush Element
For The Low Pressure Retractable System

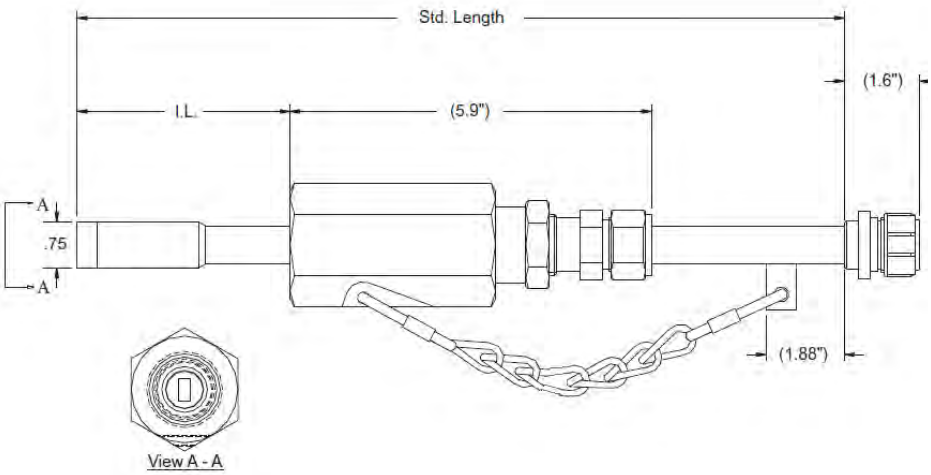

All dimensions are in inches

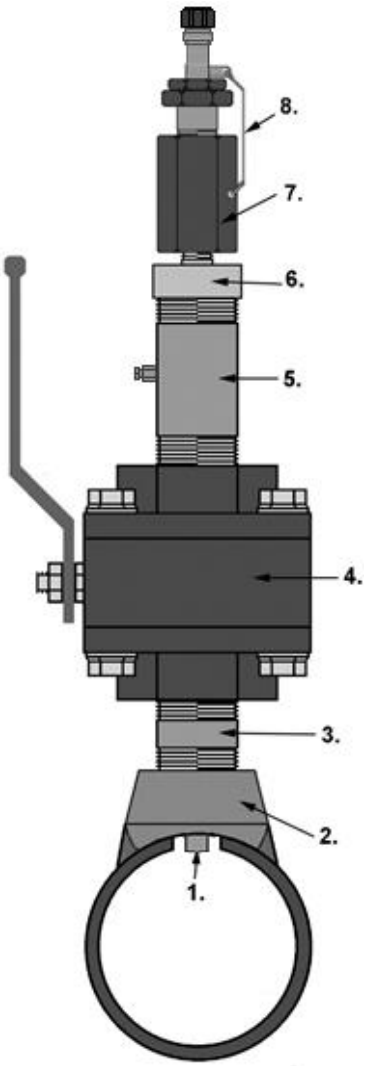

Picture is for illustrative purposes only, flanged connection is also available

The Model ER4200 is a retractable, flush-mount, electrical resistance probe ideally suited for applications where the probe element needs to be flush with the wall of the pipe.

A specially designed packing gland is used with the probe for insertion to or retraction from a pressurised system without a process shutdown. Standard packing material in the packing gland is Teflon®. Grafoil packing can be provided if requested.

The probe is designed to mount into a 1" piping system, but can easily be adapted to fit your specific requirements. The probe consists of an insertion rod with an element, a hermetically sealed connector welded in place, and a packing gland.

Key	
1 – Probe Element 2 – Thredo-let (flanged connection is available) 3 – TBE Pipe Nipple 4 – Full Bore Ball Valve (flanged connection is available)	5 – TBE Pipe Nipple (usually fitted with bleed valve) 6 – Thread adaptor (if required) 7 – Packing gland 8 – Safety chain Items 1-6 are supplied separately from the ER4200

The insertion length (I.L.) is calculated to the end of the element. Probe length can be specified by the customer. For standard probes, the maximum length is given in the chart below. Several standard elements are available to meet your specific needs.

Specifications				
Probe Body Material	316 Stainless Steel*		Order Length	I.L. (max)
Element Seal	Epoxy		24"	16.22"
Fill Material	Epoxy		30"	22.22"
Temperature Rating	260°C / 500°F Teflon®		36"	28.22"
Pressure Rating	2000 PSI / 138 Barg**		42"	34.22"
Mounting	Minimum 1" Full Bore Valve			

* Other material options are available

** Easy Tool (Product Code: SR2159-ERXX) is recommended for insertion or retraction in systems with pressure over 150 psi

A DIVISION OF BAC CORROSION CONTROL
RCSL (A TRADING DIVISION OF BAC CORROSION CONTROL LTD)
STAFFORD PARK 11, TELFORD, SHROPSHIRE, TF3 3AY
T : +44 (0) 1952 290321 E : sales@rcslgroup.com W: www.rcslgroup.com
MEMBER OF MIDROC EUROPE

Model ER4200 Ordering Product Code Generation							
ER45	Electrical Resistance 1 inch Female NPT Probe, Packing Gland with Teflon®						
ER75	Electrical Resistance 1 inch Female NPT Probe, Packing Gland with Grafoil®						
	Probe Body Material						
	22	316					
	44	C276					
		E/R Element Options					
		A0	FS04 Flush Mount - 4 mil thickness (2 mil useful probe life)				
		B0	FS08 Flush Mount - 8 mil thickness (4 mil useful probe life)				
		H0	FS20 Flush Mount - 20 mil thickness (10 mil useful probe life)				
			Seal Type				
			3	Epoxy			
				Length			
				24	16.22 inches max. insertion length		
				30	22.22 inches max. insertion length		
				36	28.22 inches max. insertion length		
				42	34.22 inches max. insertion length		
					Element Alloy		
					XXX	Use Code in Alloy Chart	
						E/R Probe Options	
						00	N/A
ER45	**22**	**A0**	**3**	**36**	**375**	**00**	**Example of Probe Ordering Product Code**

Probe Element Alloy Chart					
Code	**Description**	**UNS#**	**Code**	**Description**	**UNS#**
375*	C1010*	G10100	159	316L S.S	S31603
538	5Cr 1/2Mo	K42544	A12	C276	N10276
541	9Cr 1Mo	K90941	602	Alloy 625	N06625
186	410 S.S	S41000	419	CDA110	C11000
141	304 S.S	S30400	434	CDA443	C44300

Note: Not all alloys are available with all element types and seals.
* Chemically equivalent to standard pipe-grade carbon steels.

For alloys, sizes, or other special requirements not listed, please contact our sales department.

Safety clamps are available separately, these provide additional support to the packing gland and safety chain to control the positioning of the coupons within the pipe.

Safety Clamp Assembly Product Code:	
PS5463141**XX**	Replace XX with Length, e.g. PS5463141**24**

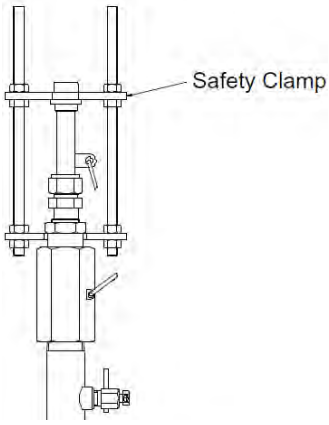

A DIVISION OF BAC CORROSION CONTROL
RCSL (A TRADING DIVISION OF BAC CORROSION CONTROL LTD)
STAFFORD PARK 11, TELFORD, SHROPSHIRE, TF3 3AY
T : +44 (0) 1952 290321 E : sales@rcslgroup.com W: www.rcslgroup.com
MEMBER OF MIDROC EUROPE

3.13
Model ER4210
Retractable Electrical Resistance Probe With Large Flush Element
For The Low Pressure Retractable System

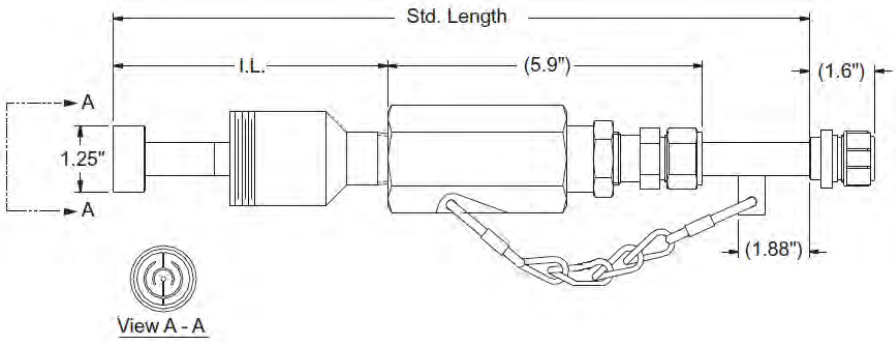

All dimensions are in inches

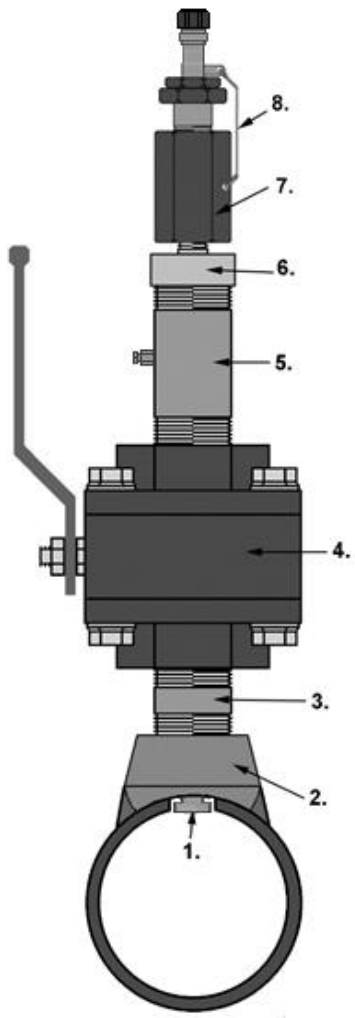

Picture is for illustrative purposes only, flanged connection is also available

The Model ER4210 is a retractable, flush-mount, electrical resistance probe ideally suited for applications where the probe element needs to be flush with the wall of the pipe.

A specially designed packing gland is used with the probe for insertion to or retraction from a pressurised system without a process shutdown. Standard packing material in the packing gland is Teflon®.

The probe is designed to mount into a 1½" piping system, but can easily be adapted to fit larger requirements.

The probe consists of an insertion rod with an element, a hermetically sealed connector welded in place, and a packing gland with a 1" to 1½" swage nipple.

Key	
1 – Probe Element	5 – TBE Pipe Nipple (usually fitted with bleed valve)
2 – Thredo-let (flanged connection is available)	6 – Thread adaptor
3 – TBE Pipe Nipple	7 – Packing gland
4 – Full Bore Ball Valve (flanged connection is available)	8 – Safety chain
	Items 1-5 are supplied separately from the ER4210

The insertion length (I.L.) is calculated to the end of the element. Probe length can be specified by the customer. For standard probes, the maximum length is given in the chart below. Several standard elements are available to meet your specific needs.

Specifications				
Probe Body Material	316 Stainless Steel*		Order Length	I.L. (max)
Element Seal	Epoxy		24"	11.22"
Fill Material	Epoxy		30"	17.22"
Temperature Rating	260°C / 500°F Teflon®		36"	23.22"
Pressure Rating	2000 PSI / 138 Barg**		42"	29.22"
Mounting	Minimum 1½" Full Bore Valve			

* Other material options are available

** Easy Tool (Product Code: SR2159-ERXX) is recommended for insertion or retraction in systems with pressure over 150 psi

A DIVISION OF BAC CORROSION CONTROL
RCSL (A TRADING DIVISION OF BAC CORROSION CONTROL LTD)
STAFFORD PARK 11, TELFORD, SHROPSHIRE, TF3 3AY
T : +44 (0) 1952 290321 E : sales@rcslgroup.com W: www.rcslgroup.com
MEMBER OF MIDROC EUROPE

Model ER4210 Ordering Product Code Generation							
ERB	Electrical Resistance Pipe Plug Probe with Packing Gland and Swage Nipple						
	Pipe Plug Size						
	6	2” NPT Pipe Plug					
	7	1 ½” NPT Pipe Plug					
		Probe Body Material					
		22	316				
		44	C276				
			ER Element Options				
			C03	FL05 – 5 mil thickness (2.5 mil useful probe life)			
			D03	FL10 – 10 mil thickness (5 mil useful probe life)			
			E03	FL20 – 20 mil thickness (10 useful probe life)			
			F03	FL40 – 40 mil thickness (20 mil useful probe life)			
				Length			
				24	11.22 inches max. insertion length		
				30	17.22 inches max. insertion length		
				36	23.22 inches max. insertion length		
				42	29.22 inches max. insertion length		
					Element Alloy		
					XXX	Use Code in Alloy chart	
						ER Probe Options	
						0	N/A
ERB	**6**	**22**	**C03**	**24**	**375**	**0**	**Example of Probe Ordering Product Code**

Probe Element Alloy Chart					
Code	**Description**	**UNS#**	**Code**	**Description**	**UNS#**
375*	C1010*	G10100	159	316L S.S	S31603
538	5Cr 1/2Mo	K42544	A12	C276	N10276
541	9Cr 1Mo	K90941	602	Alloy 625	N06625
186	410 S.S	S41000	419	CDA110	C11000
141	304 S.S	S30400	434	CDA443	C44300

Note: Not all alloys are available with all element types and seals.
* Chemically equivalent to standard pipe-grade carbon steels.

For alloys, sizes, or other special requirements not listed, please contact our sales department.

Safety clamps are available separately, these provide additional support to the packing gland and safety chain to control the positioning of the coupons within the pipe.

Safety Clamp Assembly Product Code:	
PS5463141**XX**	Replace XX with Length, e.g. PS5463141**24**

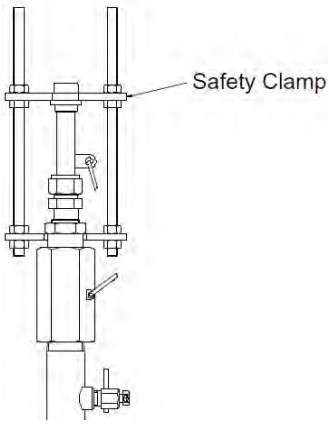

A DIVISION OF BAC CORROSION CONTROL
RCSL (A TRADING DIVISION OF BAC CORROSION CONTROL LTD)
STAFFORD PARK 11, TELFORD, SHROPSHIRE, TF3 3AY
T : +44 (0) 1952 290321 E : sales@rcslgroup.com W: www.rcslgroup.com
MEMBER OF MIDROC EUROPE

3.14
Model ER4300
Retractable Electrical Resistance Probe With Spiral Loop Element
Special Order Probe For The Low Pressure Retractable System

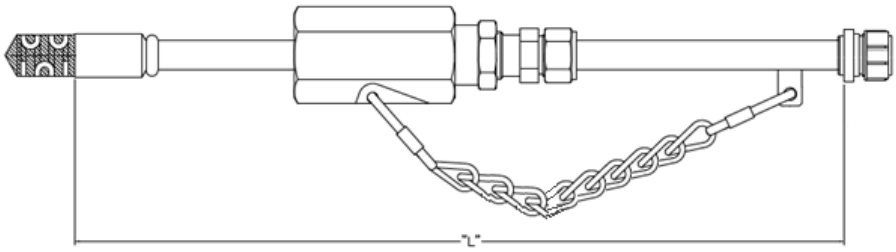

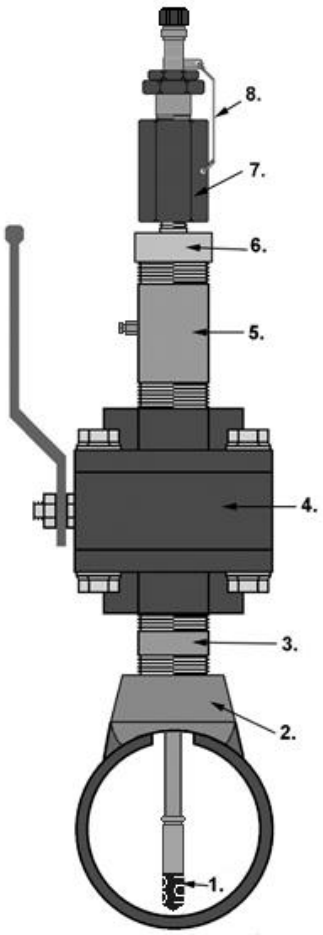

Picture is for illustrative purposes only, flanged connection is also available

The Model ER4300 is a retractable, electrical resistance probe commonly used in field and plant applications.

The element is a spiral wound strip encased in epoxy. This approach to element construction offers several advantages over other element designs:

- High intrinsic resistance – provides highly stable readings with low susceptibility to noise.
- High element strength – allows use in very high flow rate regimes such as a gas transmission.
- Wide spacing of element loops – minimises the risk of iron sulphide scaling and bridging.

While the spiral loop is ideally suited to fast flowing, sour systems, its high stability makes it a suitable choice for oil and gas systems.

Key	
1 – Probe Element 2 – Thredo-let (flanged connection is available) 3 – TBE Pipe Nipple 4 – Full Bore Ball Valve (flanged connection is available)	5 – TBE Pipe Nipple (usually fitted with bleed valve) 6 – Thread adaptor (if required) 7 – Packing gland 8 – Safety chain Items 1-6 are supplied separately from the ER4300

A specially designed packing gland is used with the probe for insertion into or retraction from a pressurised system without a process shutdown. Standard packing material in the packing gland is Teflon®, however, grafoil packing can be provided for high temperature applications*.

When the probe element requires replacement, the packing gland assembly may be reused. The probe is designed to mount onto a 1" piping system, but can easily be adapted to fit your specific requirements.

The probe assembly consists of a replaceable insertion rod with an element, a hermetically sealed connector welded in place, and a packing gland. A safety chain and safety nut are also provided to prevent blowout. A velocity shield can be added to the assembly if required.

Specifications				
Probe Body Material	316 Stainless Steel**		Order Length	Approx. I.L. (max)
Element Seal	Epoxy		24"	17.6"
Fill Material	Epoxy		30"	23.6"
Temperature Rating	260°C / 500°F Teflon®		36"	29.6"
Pressure Rating	2000 PSI / 138 Barg**		42"	35.6"
Mounting	Minimum 1" Full Bore Valve			

* Other material options are available
** Easy Tool (Product Code: SR2159-ERXX) is recommended for insertion or retraction in systems with pressure over 150 psi

A DIVISION OF BAC CORROSION CONTROL
RCSL (A TRADING DIVISION OF BAC CORROSION CONTROL LTD)
STAFFORD PARK 11, TELFORD, SHROPSHIRE, TF3 3AY
T : +44 (0) 1952 290321 E : sales@rcslgroup.com W: www.rcslgroup.com
MEMBER OF MIDROC EUROPE

Model ER4300

Retractable Electrical Resistance Probe With Spiral Loop Element

Special Order Probe For The Low Pressure Retractable System

Model ER4300 Ordering Product Code Generation								
ER45	Electrical Resistance 1 inch Female NPT Probe, Packing Gland with Teflon®							
ER75	Electrical Resistance 1 inch Female NPT Probe, Packing Gland with Grafoil®							
ER00	Electrical Resistance Replacement Insertion Rod							
	Probe Body Material							
	2	316						
	4	C276						
		Packing Gland Material						
		0	N/A (replacement insertion rod)					
		2	316					
		4	C276					
			E/R Element Options					
			K	SP10 Spiral Loop - 10 mil thickness (5 mil useful probe life)				
			L	SP20 Spiral Loop - 20 mil thickness (10 mil useful probe life)				
				Seal Type				
				3	Epoxy			
					Length (Approx.)			
					24	17.60 inches max. insertion length		
					30	23.60 inches max. insertion length		
					36	29.60 inches max. insertion length		
					42	35.60 inches max. insertion length		
						Element Alloy		
						XXX	Use Code in Alloy Chart	
							E/R Probe Options	
							00	No Shield
ER45	**2**	**2**	**L**	**3**	**36**	**375**	**00**	**Example of Probe Ordering Product Code**

Probe Element Alloy Chart					
Code	**Description**	**UNS#**	**Code**	**Description**	**UNS#**
375*	C1010*	G10100	159	316L S.S	S31603
538	5Cr 1/2Mo	K42544	A12	C276	N10276
541	9Cr 1Mo	K90941	602	Alloy 625	N06625
186	410 S.S	S41000	419	CDA110	C11000
141	304 S.S	S30400	434	CDA443	C44300

Note: Not all alloys are available with all element types and seals.
* Chemically equivalent to standard pipe-grade carbon steels.

For alloys, sizes, or other special requirements not listed, please contact our sales department.

Safety clamps are available separately, these provide additional support to the packing gland and safety chain to control the positioning of the coupons within the pipe.

Safety Clamp Assembly Product Code:	
PS5463141**XX**	Replace XX with Length, e.g. PS5463141**24**

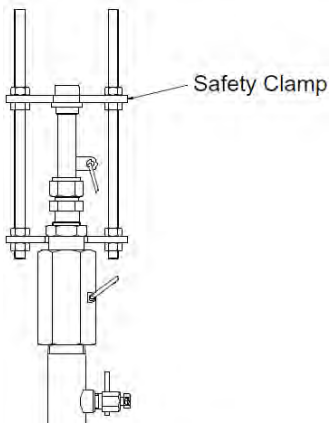

A DIVISION OF BAC CORROSION CONTROL
RCSL (A TRADING DIVISION OF BAC CORROSION CONTROL LTD)
STAFFORD PARK 11, TELFORD, SHROPSHIRE, TF3 3AY
T : +44 (0) 1952 290321 E : sales@rcslgroup.com W: www.rcslgroup.com
MEMBER OF MIDROC EUROPE

3.15
Model ER6000
Electrical Resistance Probe With Loop Element
For Direct Mounting Via Flanged Branch

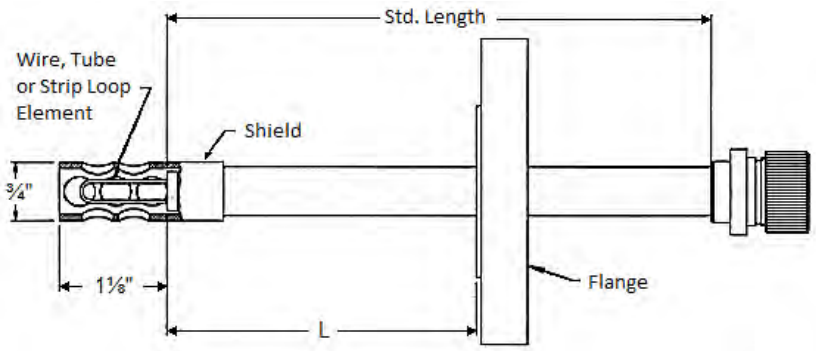

All dimensions are in inches

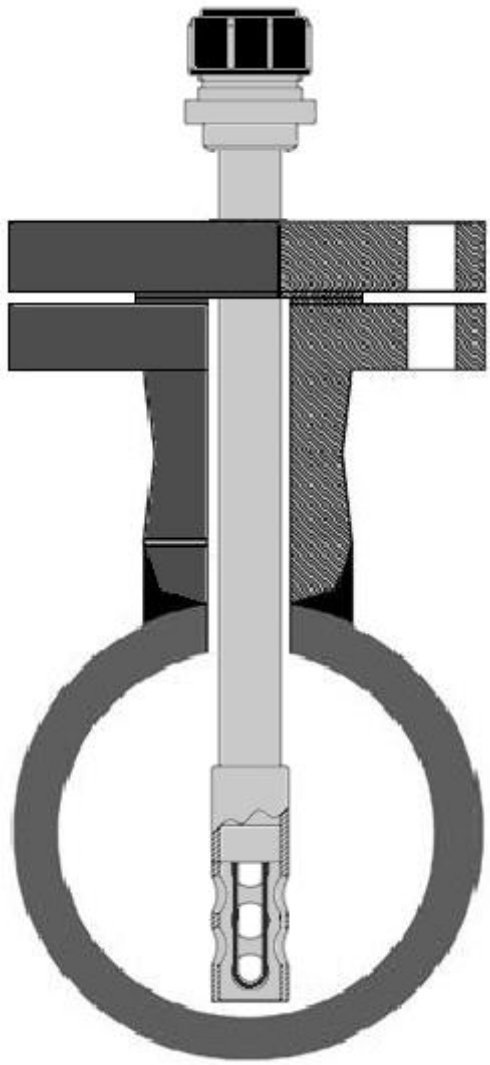

The Model ER6000 is a fixed-insertion-length, flange-mounted, electrical resistance probe. The probe is ideally suited for use in high pressure and/or hazardous applications where threaded fittings are not available or not recommended.

Process shutdown or process isolation is required for installation and inspection.

The probe assembly consists of an insertion rod with an element, a hermetically sealed connector and a flange (as specified by customer), which are all welded in place.

A velocity shield can be added to the assembly if required and a mechanical seal can be added for additional safety.

Several standard elements, lengths and different flange sizes are available to meet your specific needs (please refer to the Element and Alloy Selection Chart for more information.)

Specifications				
Probe Body Material	316 Stainless Steel*		Order Length	I.L. (max)
Element Seal	Glass or Teflon		8"	6.125"
Fill Material	Ceramic		12"	10.125"
Temperature Rating	260°C / 500°F Teflon®		18"	16.125"
Pressure Rating	Per flange pressure rating		24"	22.125"
Mounting	Flanged branch			

* Other material options are available

A DIVISION OF BAC CORROSION CONTROL
RCSL (A TRADING DIVISION OF BAC CORROSION CONTROL LTD)
STAFFORD PARK 11, TELFORD, SHROPSHIRE, TF3 3AY
T : +44 (0) 1952 290321 E : sales@rcslgroup.com W: www.rcslgroup.com
MEMBER OF MIDROC EUROPE

3.15
Model ER6000
Electrical Resistance Probe With Loop Element
For Direct Mounting Via Flanged Branch

Model ER6000 Ordering Product Code Generation									
ER6	Electrical Resistance Fixed Length Probe with Flange								
	Flange Size								
	1	1 inch Flange							
	2	1½ inch Flange							
	3	2 inch Flange							
	4	3 inch Flange							
	5	4 inch Flange							
	7	6 inch Flange							
		Probe Body Material							
		22	316						
		44	C276						
			E/R Element Options						
			0	WR40 Wire Loop - 40 mil thickness (10 mil useful probe life)					
			1	WR80 Wire Loop - 80 mil thickness (20 mil useful probe life)					
			2	TU04 Tube Loop - 4 mil thickness (2 mil useful probe life)					
			3	TU08 Tube Loop - 8 mil thickness (4 mil useful probe life)					
			8	SL05 Strip Loop - 5 mil thickness (1.25 mil useful probe life)					
			9	SL10 Strip Loop - 10 mil thickness (2.5 mil useful probe life)					
				Flange Pressure Rating					
				1	150 lb.	As standard the flange is ANSI RF ANSI RTJ and API are available to special order			
				2	300 lb.				
				3	600 lb.				
				5	1500 lb.				
				6	900 lb.				
				8	2500lb				
					Seal Type				
					1	Glass			
					2	Teflon®			
					3	Epoxy			
						Insertion Length			
						08	6.125 inches max. insertion length		
						12	10.125 inches max. insertion length		
						18	16.125 inches max. insertion length		
						24	22.125 inches max. insertion length		
							Element Alloy		
							XXX	Use Code in Alloy Chart	
								E/R Probe Options	
								00	No Shield
								01	Shield, coupon adapter (118), hardware
								02	Shield, coupon adapter (220), hardware
								03	Shield
ER6	**2**	**22**	**4**	**1**	**2**	**08**	**375**	**03**	**Example of Probe Ordering Product Code**

Probe Element Alloy Chart					
Code	**Description**	**UNS#**	**Code**	**Description**	**UNS#**
375*	C1010*	G10100	159	316L S.S	S31603
538	5Cr 1/2Mo	K42544	A12	C276	N10276
541	9Cr 1Mo	K90941	602	Alloy 625	N06625
186	410 S.S	S41000	419	CDA110	C11000
141	304 S.S	S30400	434	CDA443	C44300

Note: Not all alloys are available with all element types and seals.
* Chemically equivalent to standard pipe-grade carbon steels.

For alloys, sizes, or other special requirements not listed, please contact our sales department.

A DIVISION OF BAC CORROSION CONTROL
RCSL (A TRADING DIVISION OF BAC CORROSION CONTROL LTD)
STAFFORD PARK 11, TELFORD, SHROPSHIRE, TF3 3AY
T : +44 (0) 1952 290321 E : sales@rcslgroup.com W: www.rcslgroup.com
MEMBER OF MIDROC EUROPE

3.16
Model ER6100
Electrical Resistance Probe With Cylindrical Element
For Direct Mounting Via Flanged Branch

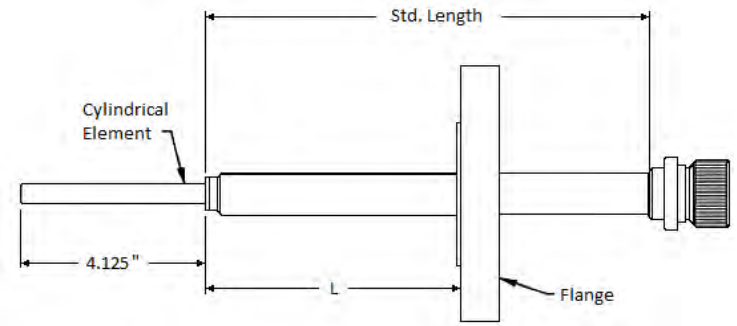

All dimensions are in inches

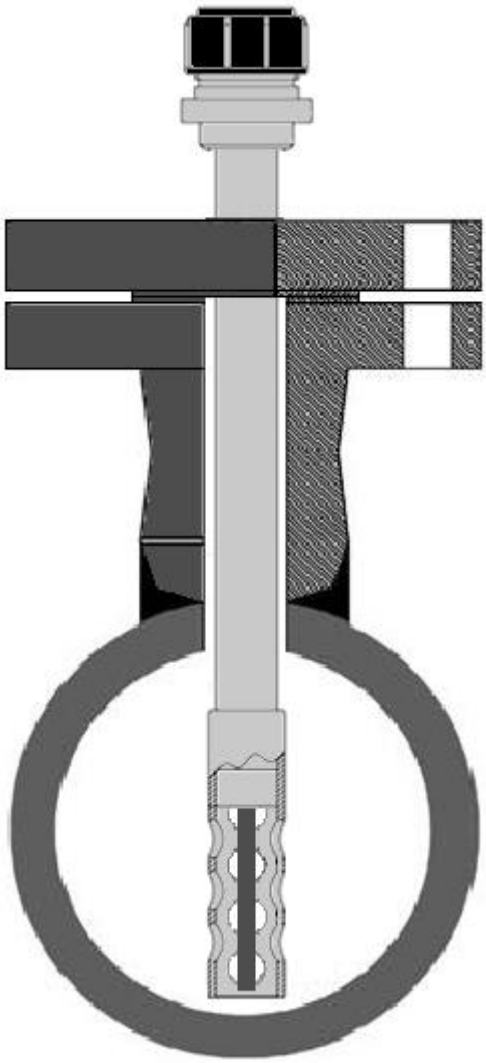

The **Model ER6100** is a fixed-length, flange-mounted, electrical resistance probe. The probe is ideally suited for use in high pressure and/or hazardous applications where threaded fittings are not available or not recommended.

Process shutdown or process isolation is required for installation and inspection.

The all-welded construction allows the probe to be used in harsh environments. The probe assembly consists of an insertion rod with an element, a hermetically sealed connector, and a flange (as specified by customer), which are all welded in place.

A mechanical seal and a velocity shield can be added if required.

The insertion length (I.L.) is calculated to the end of the shield or to the end of the element if a shield is not present. Probe length can be specified by the customer. For standard probes, the maximum insertion length is given in the chart below and, in this case, is based on a 1" total flange thickness.

Several standard elements, lengths and different flange sizes are available to meet your specific needs (please refer to the Element and Alloy Selection Chart for more information.)

Specifications				
Probe Body Material	316 Stainless Steel*		Order Length	I.L. (max)
Element Seal	Welded		8"	9"
Fill Material	Ceramic		12"	13"
Temperature Rating	260°C / 500°F Teflon®		18"	19"
Pressure Rating	Per flange pressure rating		24"	25"
Mounting	Flanged branch			

* Other material options are available

A DIVISION OF BAC CORROSION CONTROL
RCSL (A TRADING DIVISION OF BAC CORROSION CONTROL LTD)
STAFFORD PARK 11, TELFORD, SHROPSHIRE, TF3 3AY
T : +44 (0) 1952 290321 E : sales@rcslgroup.com W: www.rcslgroup.com
MEMBER OF MIDROC EUROPE

3.16
Model ER6100
Electrical Resistance Probe With Cylindrical Element
For Direct Mounting Via Flanged Branch

Model ER6100 Ordering Product Code Generation								
ER6	Electrical Resistance Fixed Length Probe with Flange							
	Flange Size							
	1	1 inch Flange						
	2	1½ inch Flange						
	3	2 inch Flange						
	4	3 inch Flange						
	5	4 inch Flange						
	7	6 inch Flange						
		Probe Body Material						
		22	316					
		44	C276					
			E/R Element Options					
			5	CT10 Cylindrical - 10 mil thickness (5 mil useful probe life)				
			6	CT20 Cylindrical - 20 mil thickness (10 mil useful probe life)				
			7	CT50 Cylindrical - 50 mil thickness (25 mil useful probe life)				
				Flange Pressure Rating				
				10	150 lb.	As standard the flange is ANSI RF ANSI RTJ and API are available to special order		
				20	300 lb.			
				30	600 lb.			
				50	1500 lb.			
				60	900 lb.			
				80	2500 lb.			
					Insertion Length			
					08	9 inches max. insertion length		
					12	13 inches max. insertion length		
					18	19 inches max. insertion length		
					24	25 inches max. insertion length		
						Element Alloy		
						XXX	Use Code in Alloy Chart	
							E/R Probe Options	
							00	No Shield
							01	Shield, coupon adapter (118), hardware
							02	Shield, coupon adapter (220), hardware
							03	Shield
ER6	**2**	**22**	**7**	**20**	**08**	**375**	**03**	**Example of Probe Ordering Product Code**

Probe Element Alloy Chart					
Code	**Description**	**UNS#**	**Code**	**Description**	**UNS#**
375*	C1010*	G10100	159	316L S.S	S31603
538	5Cr 1/2Mo	K42544	A12	C276	N10276
541	9Cr 1Mo	K90941	602	Alloy 625	N06625
186	410 S.S	S41000	419	CDA110	C11000
141	304 S.S	S30400	434	CDA443	C44300

Note: Not all alloys are available with all element types and seals.
* Chemically equivalent to standard pipe-grade carbon steels.

For alloys, sizes, or other special requirements not listed, please contact our sales department.

A DIVISION OF BAC CORROSION CONTROL
RCSL (A TRADING DIVISION OF BAC CORROSION CONTROL LTD)
STAFFORD PARK 11, TELFORD, SHROPSHIRE, TF3 3AY
T : +44 (0) 1952 290321 E : sales@rcslgroup.com W: www.rcslgroup.com
MEMBER OF MIDROC EUROPE

3.17
Model ER6200
Electrical Resistance Probe With Flush Element
For Direct Mounting Via Flanged Branch

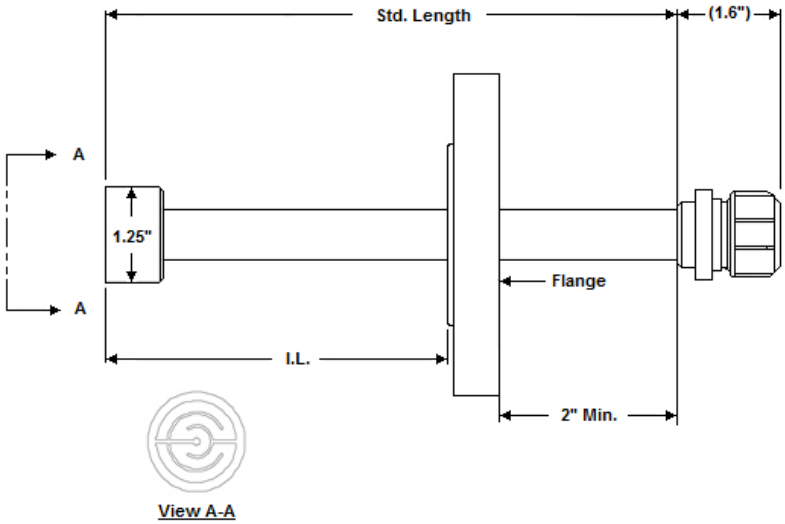

All dimensions are in inches

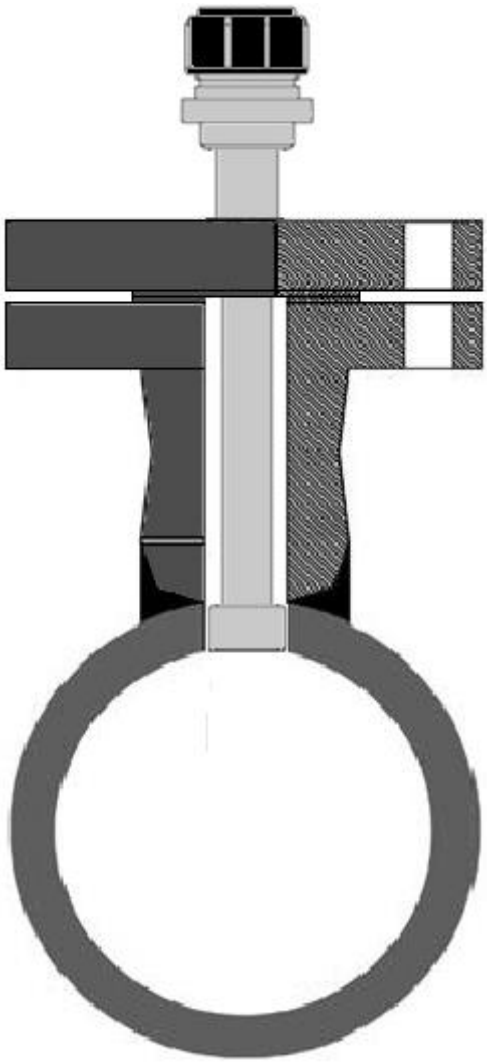

The Model ER6200 is a fixed-length, flange-mounted, electrical resistance probe. The probe is ideally suited for use in high pressure and/or hazardous applications where threaded fittings are not available or not recommended.

Process shutdown or process isolation is required for installation and inspection.

The all-welded construction allows the probe to be used in harsh environments. The probe assembly consists of an insertion rod with an element, a hermetically sealed connector, and a flange (as specified by customer), which are all welded in place.

A mechanical seal can be added if required.

The insertion length (I.L.) is calculated to the end the element. Probe length can be specified by the customer. For standard probes, the maximum insertion length is given in the chart below and, in this case, is based on a 1" total flange thickness.

Several standard elements are available to meet your specific needs.

Specifications				
Probe Body Material	316 Stainless Steel*		Order Length	I.L. (max)
Element Seal	Epoxy		8"	5"
Fill Material	Epoxy		12"	9"
Temperature Rating	260°C / 500°F Teflon®		18"	15"
Pressure Rating	Per flange pressure rating		24"	21"
Mounting	Flanged branch			

* Other material options are available

A DIVISION OF BAC CORROSION CONTROL
RCSL (A TRADING DIVISION OF BAC CORROSION CONTROL LTD)
STAFFORD PARK 11, TELFORD, SHROPSHIRE, TF3 3AY
T : +44 (0) 1952 290321 E : sales@rcslgroup.com W: www.rcslgroup.com
MEMBER OF MIDROC EUROPE

3.17
Model ER6200
Electrical Resistance Probe With Flush Element
For Direct Mounting Via Flanged Branch

Model ER6200 Ordering Product Code Generation								
ER6	Electrical Resistance Fixed Length Probe with Flange							
	Flange Size							
	2	1½ inch Flange						
	3	2 inch Flange						
	4	3 inch Flange						
	5	4 inch Flange						
	7	6 inch Flange						
		Probe Body Material						
		22	316					
		44	C276					
			E/R Element Options					
			C	FL05 Flush Mount – 5 mil thickness (2.5 mil useful probe life)				
			D	FL10 Flush Mount – 10 mil thickness (5 mil useful probe life)				
			E	FL20 Flush Mount – 20 mil thickness (10 mil useful probe life)				
			F	FL40 Flush Mount – 40 mil thickness (20 mil useful probe life)				
				Flange Pressure Rating				
				13	150 lb.	As standard the flange is ANSI RF ANSI RTJ and API are available to special order		
				23	300 lb.			
				33	600 lb.			
				53	1500 lb.			
				63	900 lb.			
				83	2500 lb.			
					Insertion Length			
					08	5 inches max. insertion length		
					12	9 inches max. insertion length		
					18	15 inches max. insertion length		
					24	21 inches max. insertion length		
						Element Alloy		
						XXX	Use Code in Alloy Chart	
							E/R Probe Options	
							00	N/A
ER6	**2**	**22**	**C**	**13**	**08**	**375**	**00**	**Example of Probe Ordering #**

Probe Element Alloy Chart					
Code	**Description**	**UNS#**	**Code**	**Description**	**UNS#**
375*	C1010*	G10100	159	316L S.S	S31603
538	5Cr 1/2Mo	K42544	A12	C276	N10276
541	9Cr 1Mo	K90941	602	Alloy 625	N06625
186	410 S.S	S41000	419	CDA110	C11000
141	304 S.S	S30400	434	CDA443	C44300

Note: Not all alloys are available with all element types and seals.
* Chemically equivalent to standard pipe-grade carbon steels.

For alloys, sizes, or other special requirements not listed, please contact our sales department.

A DIVISION OF BAC CORROSION CONTROL
RCSL (A TRADING DIVISION OF BAC CORROSION CONTROL LTD)
STAFFORD PARK 11, TELFORD, SHROPSHIRE, TF3 3AY
T : +44 (0) 1952 290321 E : sales@rcslgroup.com W: www.rcslgroup.com
MEMBER OF MIDROC EUROPE

3.18
Model ER7000
Retrievable Electrical Resistance Probe With Loop Element
For The High Pressure Two Inch Access Fitting System

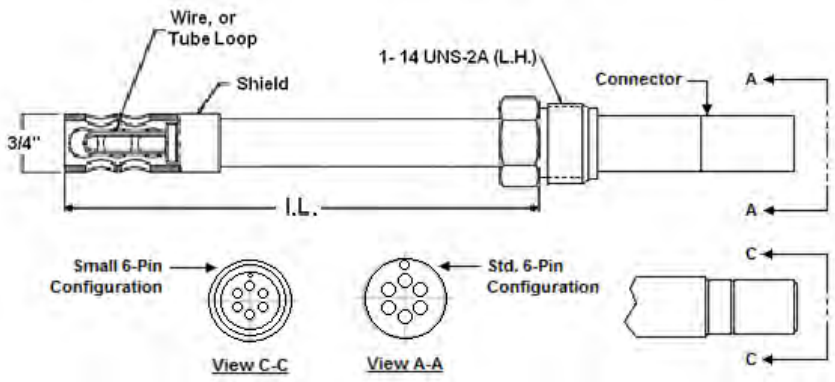

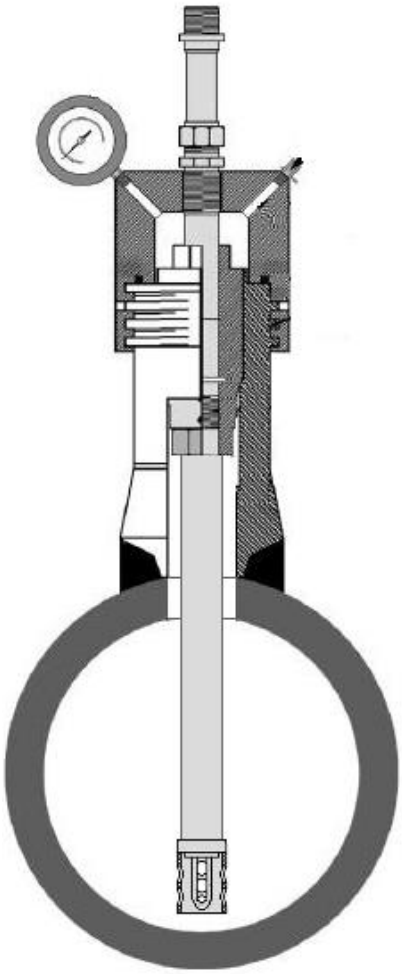

Picture is for illustrative purposes only, other access fitting mounting options are available.

The Model ER7000 Electrical Resistance Probe is a fixed-length probe for use with the two inch access fitting systems at high pressures and temperatures.

The probe assembly consists of an insertion rod with an element, a hermetically sealed six pin connector and a pipe plug with the industry standard 1-14 UNS 2A LH thread.

The pipe plug on the probe screws into the hollow plug nut of the access system. This allows the probe to be installed in the process, using a retriever tool and service valve, without process shutdown.

A shield for the element is fitted to the ER7000 probe as standard, various options are available.

Several standard element and probe lengths are available to meet your specific needs. (Refer to the Element and Alloy Selection Chart for more information.)

Probe adaptors are available and must be ordered separately.

The insertion length (I.L.) can range from 2.875" up to any length specified by the customer in ⅛" increments.

Specifications	
Probe Body	316 Stainless Steel
Element Seal	Glass
Fill Material	Ceramic
Temperature Rating	260°C / 500°F
Pressure Rating	3600 PSI / 245 Barg
Mounting	Two Inch Access Fitting System With Hollow Plug

A DIVISION OF BAC CORROSION CONTROL
RCSL (A TRADING DIVISION OF BAC CORROSION CONTROL LTD)
STAFFORD PARK 11, TELFORD, SHROPSHIRE, TF3 3AY
T : +44 (0) 1952 290321 E : sales@rcslgroup.com W: www.rcslgroup.com
MEMBER OF MIDROC EUROPE

3.18
Model ER7000
Retrievable Electrical Resistance Probe With Loop Element
For The High Pressure Two Inch Access Fitting System

Model ER7000 Ordering Product Code Generation									
HR	Electrical Resistance Probe For Use With The Two Inch Access Fitting System								
	Mounting Material								
	2	316							
	3	C276							
		Connector Type							
		1	Small Connector						
		2	Standard Connector						
			E/R Element Options						
			0	WR40 Wire Loop - 40 mil thickness (10 mil useful probe life)					
			1	WR80 Wire Loop - 80 mil thickness (20 mil useful probe life)					
			2	TU04 Tube Loop - 4 mil thickness (2 mil useful probe life)					
			3	TU08 Tube Loop - 8 mil thickness (4 mil useful probe life)					
				Seal Type					
				1	Glass				
				2	Teflon® (PTFE)				
				3	Epoxy				
					Length (calculated length rounded down to ⅛ inch increment)				
					XXXX	Length in inches, in 2 decimal place format (e.g. 7.25 inches = 0725)			
						Element Alloy			
						XXX	Use Code in Alloy Chart		
							E/R Probe Options		
							00	No Shield	
							01	Standard Shield	
							02	Hi-velocity Shield	
							03	Coupon Holding Shield	
								Probe Seal Options	
								01	PTFE
								02	PEEK
HR	**2**	**2**	**3**	**1**	**0725**	**375**	**01**	**01**	**Example of Probe Ordering Product Code**

Probe Element Alloy Chart					
Code	**Description**	**UNS#**	**Code**	**Description**	**UNS#**
375	C1010 Carbon Steel*	G10100	159	316L S.S	S31603
538	5Cr ½Mo	K42544	A12	C276	N10276
541	9Cr 1Mo	K90941	602	Alloy 625	N06625
186	410 S.S	S41000	419	CDA110	C11000
141	304 S.S	S30400	434	CDA443	C44300

*Chemically equivalent to standard pipe grade carbon steels
Note: Not all alloys are available with all element types and seals.
For alloys, sizes, or other special requirements not listed, please contact our sales department.

Electrical Resistance Probe Spare Parts	Product Code
Replacement PTFE Probe Seal (seals probe to hollow plug)	700277
Replacement PEEK Probe Seal (seals probe to hollow plug)	700339
Hollow Plug Bore-Seal Nut, 316 S/S (seals hollow plug when probe is not installed)	700311
Shield For Probe Element	700608
Shield For Probe Element, High Velocity Service Conditions	700609
Shield For Probe Element With Integral Strip Coupon Holder	700612

A DIVISION OF BAC CORROSION CONTROL
RCSL (A TRADING DIVISION OF BAC CORROSION CONTROL LTD)
STAFFORD PARK 11, TELFORD, SHROPSHIRE, TF3 3AY
T : +44 (0) 1952 290321 E : sales@rcslgroup.com W: www.rcslgroup.com
MEMBER OF MIDROC EUROPE

3.19
Model ER7100
Retrievable Electrical Resistance Probe With Cylindrical Element
For The High Pressure Two Inch Access Fitting System

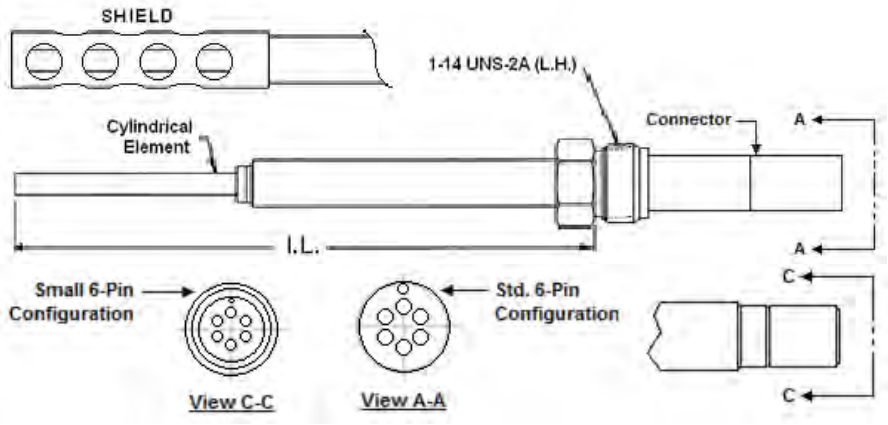

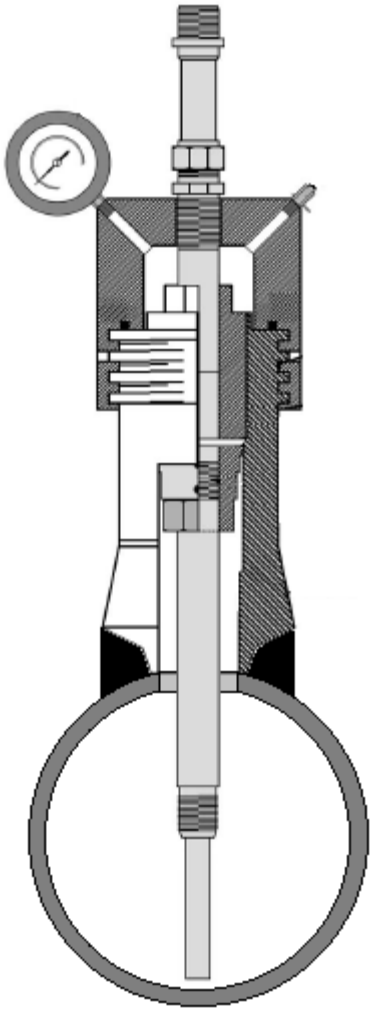

Picture is for illustrative purposes only, other access fitting mounting options are available.

The Model ER7100 Electrical Resistance Probe is a fixed-length, retrievable probe for use with the two inch access fitting system in high pressure and high temperature applications.

The all-welded construction of the element makes it ideal for harsh environments.

A shield for the element can be added to the probe if required.

The probe assembly consists of an insertion rod with an element, a hermetically sealed six pin connector and a pipe plug with the industry standard 1-14 UNS 2A LH thread.

The pipe plug on the probe screws into the hollow plug nut of the access system. This allows the probe to be installed in the process, using a retriever tool and service valve, without process shutdown.

The minimum insertion length (I.L.) for J0 element is 3”, 5" for other element types, up to any length specified by the customer in ⅛" increments.

Several standard elements are available to meet your specific needs (please see page 2). Probe adaptors are available and must be ordered separately.

Specifications	
Probe Body	316 Stainless Steel
Element Seal	Welded
Fill Material	Ceramic
Temperature Rating	260°C / 500°F
Pressure Rating	3600 PSI / 245 Barg
Mounting	Two Inch Access Fitting System With Hollow Plug

A DIVISION OF BAC CORROSION CONTROL
RCSL (A TRADING DIVISION OF BAC CORROSION CONTROL LTD)
STAFFORD PARK 11, TELFORD, SHROPSHIRE, TF3 3AY
T : +44 (0) 1952 290321 E : sales@rcslgroup.com W: www.rcslgroup.com
MEMBER OF MIDROC EUROPE

Model ER7100

Retrievable Electrical Resistance Probe With Cylindrical Element

For The High Pressure Two Inch Access Fitting System

Model ER7100 Ordering Product Code Generation								
HR	Electrical Resistance Probe For Use With The Two Inch Access Fitting System							
	Mounting Material							
	2	316						
	3	C276						
		Connector Type						
		1	Small Connector					
		2	Standard Connector					
			E/R Element Options					
			50	CT10 Cylindrical – 10 mil thickness (5 mil useful probe life)				
			J0	CT10 Cylindrical (2”) – 10 mil thickness (5 mil useful probe life)				
			60	CT20 Cylindrical – 20 mil thickness (10 mil useful probe life)				
			70	CT50 Cylindrical – 50 mil thickness (25 mil useful probe life)				
				Length (calculated length rounded down to ⅛ inch increment)				
				XXXX	Length in inches, in 2 decimal place format (e.g. 7.25 inches = 0725)			
					Element Alloy			
					XXX	Use Code in Alloy Chart		
						E/R Probe Options		
						00	No Shield	
						01	Standard Shield	
						02	Hi-velocity Shield	
						03	Coupon Holding Shield	
							Probe Seal Options	
							01	PTFE
							02	PEEK
HR	**2**	**2**	**60**	**0725**	**375**	**00**	**01**	**Example of Probe Ordering Product Code**

Probe Element Alloy Chart					
Code	**Description**	**UNS#**	**Code**	**Description**	**UNS#**
375	C1010 Carbon Steel*	G10100	159	316L S.S	S31603
538	5Cr ½Mo	K42544	A12	C276	N10276
541	9Cr 1Mo	K90941	602	Alloy 625	N06625
186	410 S.S	S41000	419	CDA110	C11000
141	304 S.S	S30400	434	CDA443	C44300

*Chemically equivalent to standard pipe grade carbon steels

Note: Not all alloys are available with all element types and seals.
For alloys, sizes, or other special requirements not listed, please contact our sales department.

Electrical Resistance Probe Spare Parts	Product Code
Replacement PTFE Probe Seal (seals probe to hollow plug)	700277
Replacement PEEK Probe Seal (seals probe to hollow plug)	700339
Hollow Plug Bore-Seal Nut, 316 S/S (seals hollow plug when probe is not installed)	700311
Shield For Probe Element	700610
Shield For Probe Element, High Velocity Service Conditions	700611
Shield For Probe Element With Integral Strip Coupon Holder	700613

A DIVISION OF BAC CORROSION CONTROL

RCSL (A TRADING DIVISION OF BAC CORROSION CONTROL LTD)
STAFFORD PARK 11, TELFORD, SHROPSHIRE, TF3 3AY
T : +44 (0) 1952 290321 E : sales@rcslgroup.com W: www.rcslgroup.com

MEMBER OF MIDROC EUROPE

3.20
Model ER7200
Retrievable Electrical Resistance Probe With Flush Element
For The High Pressure Two Inch Access Fitting System

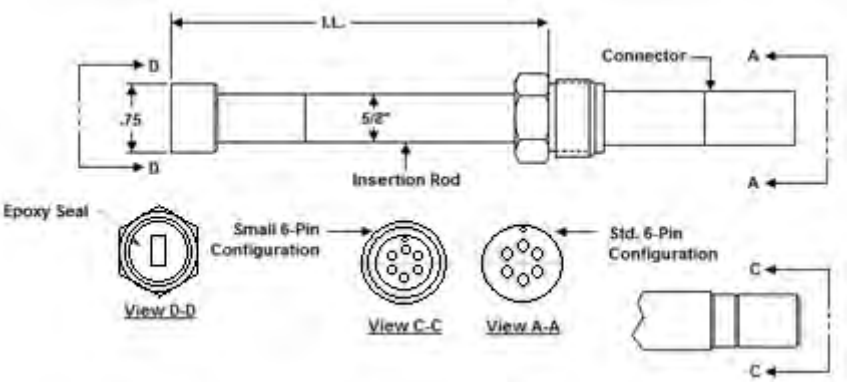

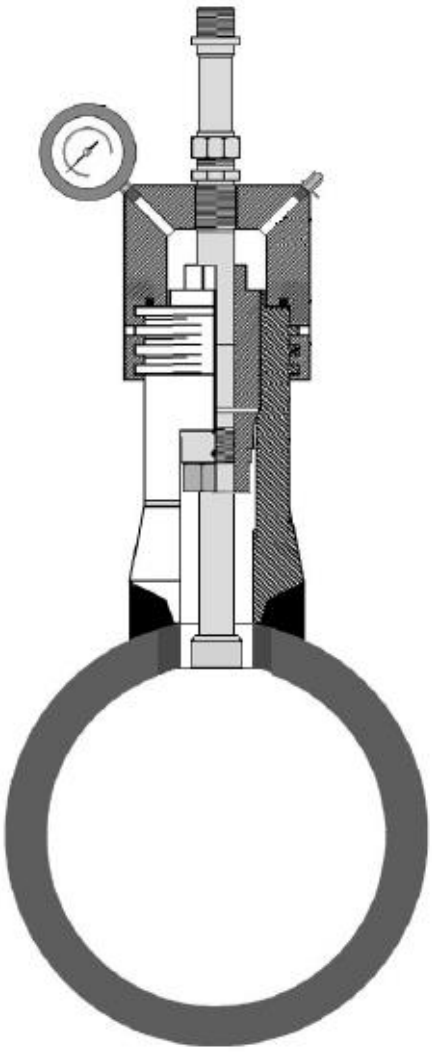

Picture is for illustrative purposes only, other access fitting mounting options are available.

The Model ER7200 Flush-Mount, Electrical Resistance Probe is a fixed-length probe for use with the two inch access fitting system in high pressure and high temperature applications.

These probes are ideally suited for applications where the probe element needs to be flush with the wall of the pipe.

The probe assembly consists of an insertion rod with an element, a hermetically sealed six pin connector and a pipe plug with the industry standard 1-14 UNS 2A LH thread.

The pipe plug on the probe screws into the hollow plug nut of the access system. This allows the probe to be installed in the process, using a retriever tool and service valve, without process shutdown.

The insertion length (I.L.) can range from a minimum of 1.75" up to any length specified by the customer in ⅛" increments.

Several standard elements are available to meet your specific needs. Probe adaptors are available and must be ordered separately.

Specifications	
Probe Body	316 Stainless Steel
Element Seal	Epoxy
Fill Material	Epoxy
Temperature Rating	260°C / 500°F
Pressure Rating	3600 PSI / 245 Barg
Mounting	Two Inch Access Fitting System With Hollow Plug

A DIVISION OF BAC CORROSION CONTROL
RCSL (A TRADING DIVISION OF BAC CORROSION CONTROL LTD)
STAFFORD PARK 11, TELFORD, SHROPSHIRE, TF3 3AY
T : +44 (0) 1952 290321 E : sales@rcslgroup.com W: www.rcslgroup.com
MEMBER OF MIDROC EUROPE

Model ER7200 Ordering Product Code Generation									
HR	Electrical Resistance Probe For Use With The Two Inch Access Fitting System								
	Mounting Material								
	2	316							
	3	C276							
		Connector Type							
		1	Small Connector						
		2	Standard Connector						
			E/R Element Options						
			A	S4 Flush Mount - 4 mil thickness (2 mil useful probe life)					
			B	S8 Flush Mount - 8 mil thickness (4 mil useful probe life)					
			H	S20 Flush Mount - 20 mil thickness (10 mil useful probe life)					
				Seal Type					
				3	Epoxy				
					Length (calculated length rounded down to ⅛ inch increment)				
					XXXX	Length in inches, in 2 decimal place format (e.g. 7.25 inches = 0725)			
						Element Alloy			
						XXX	Use Code in Alloy Chart		
							E/R Probe Options		
							00	No Shield	
								Probe Seal Options	
								01	PTFE
								02	PEEK
HR	**2**	**2**	**B**	**3**	**0725**	**375**	**00**	**01**	**Example of Probe Ordering Product Code**

Probe Element Alloy Chart					
Code	**Description**	**UNS#**	**Code**	**Description**	**UNS#**
375	C1010 Carbon Steel*	G10100	159	316L S.S	S31603
538	5Cr ½Mo	K42544	A12	C276	N10276
541	9Cr 1Mo	K90941	602	Alloy 625	N06625
186	410 S.S	S41000	419	CDA110	C11000
141	304 S.S	S30400	434	CDA443	C44300

*Chemically equivalent to standard pipe grade carbon steels

Note: Not all alloys are available with all element types and seals.
For alloys, sizes, or other special requirements not listed, please contact our sales department.

Electrical Resistance Probe Spare Parts	Product Code
Replacement PTFE Probe Seal (seals probe to hollow plug)	700277
Replacement PEEK Probe Seal (seals probe to hollow plug)	700339
Hollow Plug Bore-Seal Nut, 316 S/S (seals hollow plug when probe is not installed)	700311

A DIVISION OF BAC CORROSION CONTROL
RCSL (A TRADING DIVISION OF BAC CORROSION CONTROL LTD)
STAFFORD PARK 11, TELFORD, SHROPSHIRE, TF3 3AY
T : +44 (0) 1952 290321 E : sales@rcslgroup.com W: www.rcslgroup.com
MEMBER OF MIDROC EUROPE

3.21
Model ER7210
Retrievable Electrical Resistance Probe With Flush Element
For The High Pressure Two Inch Access Fitting System

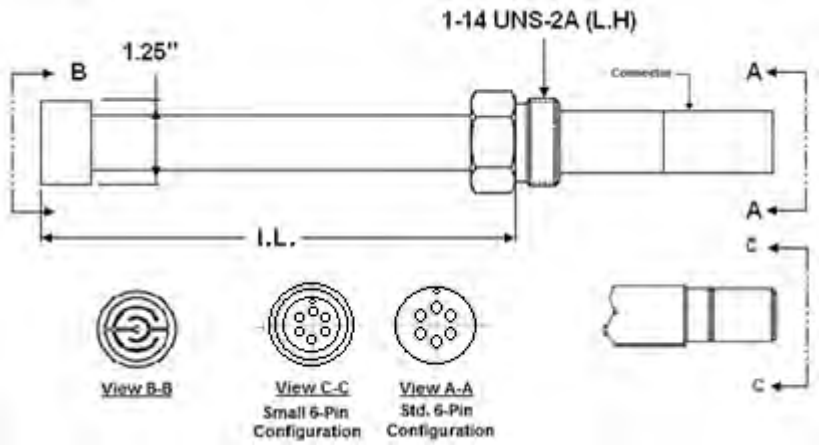

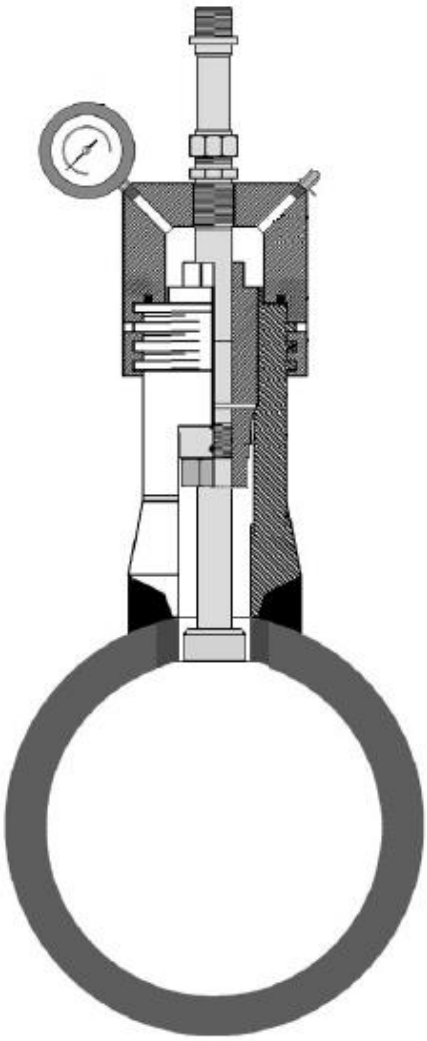

Picture is for illustrative purposes only, other access fitting mounting options are available.

The Model ER7210 is a fixed-length Flush-Mount, retrievable, electrical resistance probe for use with the two inch access fitting system in high pressure and high temperature applications.

These probes are ideally suited for applications where the probe element needs to be flush with the wall of the pipe.

The probe assembly consists of an insertion rod with an element, a hermetically sealed six pin connector and a pipe plug with the industry standard 1-14 UNS 2A LH thread.

The pipe plug on the probe screws into the hollow plug nut of the access system. This allows the probe to be installed in the process, using a retriever tool and service valve, without process shutdown.

The insertion length (I.L.) can range from a minimum of 1.75" up to any length specified by the customer in ⅛" increments.

Several standard elements are available to meet your specific needs. Probe adaptors are available and must be ordered separately.

Specifications	
Probe Body	316 Stainless Steel
Element Seal	Epoxy
Fill Material	Epoxy
Temperature Rating	260°C / 500°F
Pressure Rating	3600 PSI / 245 Barg
Mounting	Two Inch Access Fitting System With Hollow Plug

A DIVISION OF BAC CORROSION CONTROL
RCSL (A TRADING DIVISION OF BAC CORROSION CONTROL LTD)
STAFFORD PARK 11, TELFORD, SHROPSHIRE, TF3 3AY
T : +44 (0) 1952 290321 E : sales@rcslgroup.com W: www.rcslgroup.com
MEMBER OF MIDROC EUROPE

Model ER7210
Retrievable Electrical Resistance Probe With Flush Element
For The High Pressure Two Inch Access Fitting System

Model ER7210 Ordering Product Code Generation								
HR	Electrical Resistance Probe For Use With The Two Inch Access Fitting System							
	Mounting Material							
	2	316						
	3	C276						
		Connector Type						
		1	Small Connector					
		2	Standard Connector					
			E/R Element Options					
			C3	FL05 Flush Mount - 5 mil thickness (2.5 mil useful probe life)				
			D3	FL10 Flush Mount - 10 mil thickness (5 mil useful probe life)				
			E3	FL20 Flush Mount - 20 mil thickness (10 mil useful probe life)				
			F3	FL40 Flush Mount - 40 mil thickness (20 mil useful probe life)				
				Length (calculated length rounded down to ⅛ inch increment)				
				XXXX	Length in inches, in 2 decimal place format (e.g. 7.25 inches = 0725)			
					Element Alloy			
					XXX	Use Code in Alloy Chart		
						E/R Probe Options		
						00	No Shield	
							Probe Seal Options	
							01	PTFE
							02	PEEK
HR	**2**	**2**	**C3**	**0725**	**375**	**00**	**01**	**Example of Probe Ordering Product Code**

Probe Element Alloy Chart					
Code	**Description**	**UNS#**	**Code**	**Description**	**UNS#**
375	C1010 Carbon Steel*	G10100	159	316L S.S	S31603
538	5Cr ½Mo	K42544	A12	C276	N10276
541	9Cr 1Mo	K90941	602	Alloy 625	N06625
186	410 S.S	S41000	419	CDA110	C11000
141	304 S.S	S30400	434	CDA443	C44300

*Chemically equivalent to standard pipe grade carbon steels

Note: Not all alloys are available with all element types and seals.
For alloys, sizes, or other special requirements not listed, please contact our sales department.

Electrical Resistance Probe Spare Parts	Product Code
Replacement PTFE Probe Seal (seals probe to hollow plug)	700277
Replacement PEEK Probe Seal (seals probe to hollow plug)	700339
Hollow Plug Bore-Seal Nut, 316 S/S (seals hollow plug when probe is not installed)	700311

A DIVISION OF BAC CORROSION CONTROL

RCSL (A TRADING DIVISION OF BAC CORROSION CONTROL LTD)
STAFFORD PARK 11, TELFORD, SHROPSHIRE, TF3 3AY
T : +44 (0) 1952 290321 E : sales@rcslgroup.com W: www.rcslgroup.com

MEMBER OF MIDROC EUROPE

3.22
Model ER7220
Retrievable Electrical Resistance Probe With Flush Element
Adjustable Length
For The High Pressure Two Inch Access Fitting System

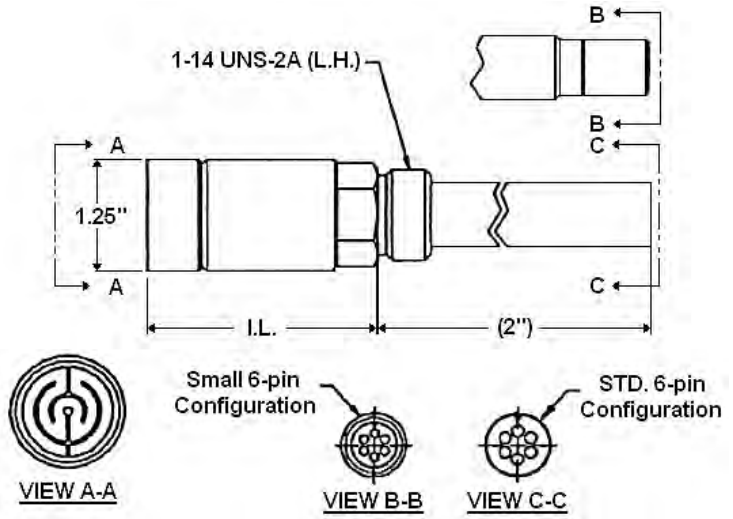

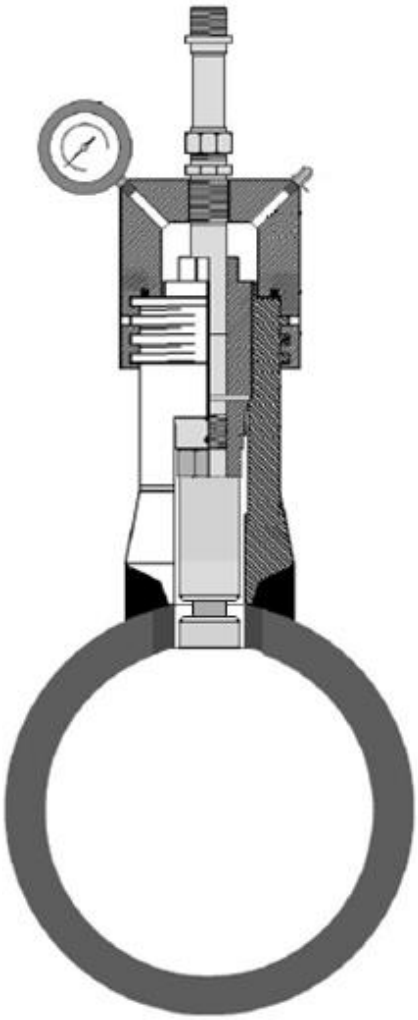

Picture is for illustrative purposes only, other access fitting mounting options are available.

The Model ER7220 is an adjustable-length, flush mount, retrievable, electrical resistance probe for use with the two inch access fitting system in high pressure and high temperature applications.

These probes are ideally suited for applications where the probe element needs to be flush with the wall of the pipe to prevent any obstructions.

The probe assembly consists of an insertion rod with an element, a hermetically sealed six pin connector and a pipe plug with the industry standard 1-14 UNS 2A LH thread.

The pipe plug on the probe screws into the hollow plug nut of the access fitting system. This allows the probe to be installed in the process, using a retriever tool and service valve, without process shutdown.

The adjustable flush element allows for a total adjustment of 1".

The insertion length (I.L.) can range from a minimum of 1.75" up to any length in 1" increments (specify lengths over 1.75" as 2", 3", 4", etc.) specified by the customer.

Several standard elements are available to meet your specific needs. Probe adaptors are available and must be ordered separately.

Specifications	
Probe Body	316 Stainless Steel
Element Seal	Epoxy
Fill Material	Epoxy
O-Ring Material	Viton (Other Materials Are Available)
Temperature Rating	260°C / 500°F
Pressure Rating	3600 PSI / 245 Barg
Mounting	Two Inch Access Fitting System With Hollow Plug

A DIVISION OF BAC CORROSION CONTROL
RCSL (A TRADING DIVISION OF BAC CORROSION CONTROL LTD)
STAFFORD PARK 11, TELFORD, SHROPSHIRE, TF3 3AY
T : +44 (0) 1952 290321 E : sales@rcslgroup.com W: www.rcslgroup.com
MEMBER OF MIDROC EUROPE

Model ER7220
Retrievable Electrical Resistance Probe With Flush Element Adjustable Length
For The High Pressure Two Inch Access Fitting System

Model ER7220 Ordering Product Code Generation								
HR	Electrical Resistance Probe For Use With The Two Inch Access Fitting System							
	Mounting Material							
	2	316						
	3	C276						
		Connector Type						
		1	Small Connector					
		2	Standard Connector					
			E/R Element Options					
			C3	FL05 Flush Mount - 5 mil thickness (2.5 mil useful probe life)				
			D3	FL10 Flush Mount - 10 mil thickness (5 mil useful probe life)				
			E3	FL20 Flush Mount - 20 mil thickness (10 mil useful probe life)				
			F3	FL40 Flush Mount - 40 mil thickness (20 mil useful probe life)				
				Length (round calculated length down to the nearest 1 inch increment)				
				XXXX	Length in inches, in 2 decimal place format (e.g. 7 inches = 0700)*			
					Element Alloy			
					XXX	Use Code in Alloy Chart		
						E/R Probe Options		
						AD	No Shield, Adjustable	
							Probe Seal Options	
							01	PTFE
							02	PEEK
HR	**2**	**2**	**C3**	**0700**	**375**	**AD**	**01**	**Example of Probe Ordering Product Code**

*Note: The order length equates to the shortest length in the adjustment range. For example for a probe with length adjustment of 7 to 8 inch, the order length is 7 inch = 0700

Probe Element Alloy Chart					
Code	**Description**	**UNS#**	**Code**	**Description**	**UNS#**
375	C1010 Carbon Steel*	G10100	159	316L S.S	S31603
538	5Cr ½Mo	K42544	A12	C276	N10276
541	9Cr 1Mo	K90941	602	Alloy 625	N06625
186	410 S.S	S41000	419	CDA110	C11000
141	304 S.S	S30400	434	CDA443	C44300

*Chemically equivalent to standard pipe grade carbon steels

Note: Not all alloys are available with all element types and seals.
For alloys, sizes, or other special requirements not listed, please contact our sales department.

Electrical Resistance Probe Spare Parts	Product Code
Replacement PTFE Probe Seal (seals probe to hollow plug)	700277
Replacement PEEK Probe Seal (seals probe to hollow plug)	700339
Hollow Plug Bore-Seal Nut, 316 S/S (seals hollow plug when probe is not installed)	700311

A DIVISION OF BAC CORROSION CONTROL

RCSL (A TRADING DIVISION OF BAC CORROSION CONTROL LTD)
STAFFORD PARK 11, TELFORD, SHROPSHIRE, TF3 3AY
T : +44 (0) 1952 290321 E : sales@rcslgroup.com W: www.rcslgroup.com

MEMBER OF MIDROC EUROPE

3.23
Model ER7230
Retrievable Electrical Resistance Probe With Flush Element
For The High Pressure Two Inch Access Fitting System

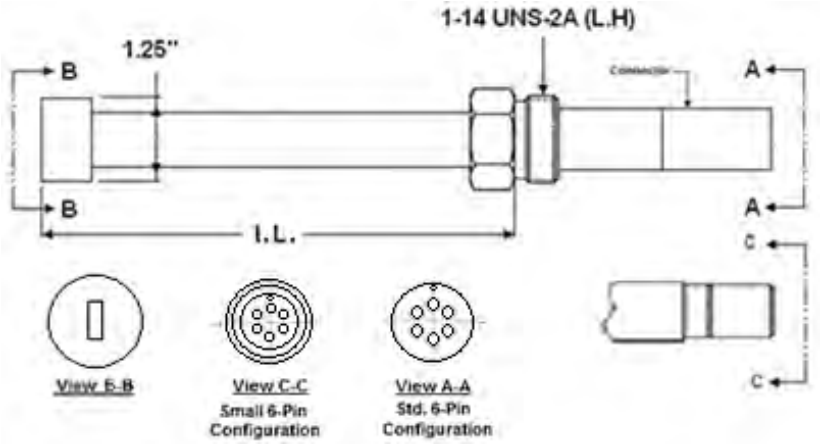

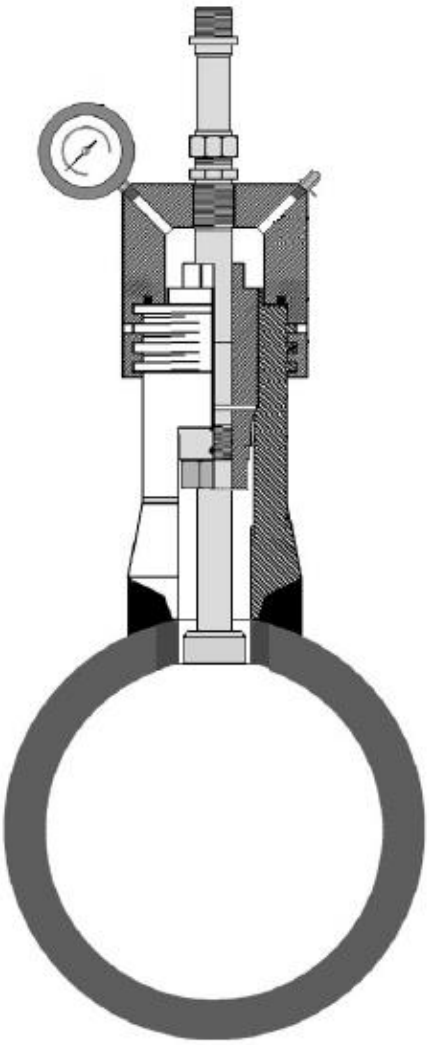

Picture is for illustrative purposes only, other access fitting mounting options are available.

The Model ER7230 is a fixed-length Flush-Mount, retrievable, electrical resistance probe for use with the two inch access fitting system in high pressure and high temperature applications.

These probes are ideally suited for applications where the probe element needs to be flush with the wall of the pipe.

The ER7230 has been specifically designed to minimize the negative effects of iron sulfide by maximizing the spacing between the sensing element and probe body, thus reducing the possibility of shorting by conductive buildup.

The probe assembly consists of an insertion rod with an element, a hermetically sealed six pin connector and a pipe plug with the industry standard 1-14 UNS 2A LH thread.

The pipe plug on the probe screws into the hollow plug nut of the access system. This allows the probe to be installed in the process, using a retriever tool and service valve, without process shutdown.

The insertion length (I.L.) can range from a minimum of 1.75" up to any length specified by the customer in ⅛" increments.

Several standard elements are available to meet your specific needs. Probe adaptors are available and must be ordered separately.

Specifications	
Probe Body	316 Stainless Steel
Element Seal	Epoxy
Fill Material	Epoxy
Temperature Rating	260°C / 500°F
Pressure Rating	3600 PSI / 245 Barg
Mounting	Two Inch Access Fitting System With Hollow Plug

A DIVISION OF BAC CORROSION CONTROL
RCSL (A TRADING DIVISION OF BAC CORROSION CONTROL LTD)
STAFFORD PARK 11, TELFORD, SHROPSHIRE, TF3 3AY
T : +44 (0) 1952 290321 E : sales@rcslgroup.com W: www.rcslgroup.com
MEMBER OF MIDROC EUROPE

Model ER7230
Retrievable Electrical Resistance Probe With Flush Element
For The High Pressure Two Inch Access Fitting System

Model ER7230 Ordering Product Code Generation								
HR	Electrical Resistance Probe For Use With The Two Inch Access Fitting System							
	Mounting Material							
	2	316						
	3	C276						
		Connector Type						
		1	Small Connector					
		2	Standard Connector					
			E/R Element Options					
			A3	FS4 Flush Mount - 4 mil thickness (2 mil useful probe life)				
			B3	FS8 Flush Mount - 8 mil thickness (4 mil useful probe life)				
			H3	FS20 Flush Mount - 20 mil thickness (10 mil useful probe life)				
				Length (calculated length rounded down to ⅛ inch increment)				
				XXXX	Length in inches, in 2 decimal place format (e.g. 7.25 inches = 0725)			
					Element Alloy			
					XXX	Use Code in Alloy Chart		
						E/R Probe Options		
						LH	Large Header	
							Probe Seal Options	
							01	PTFE
							02	PEEK
HR	**2**	**2**	**H3**	**0725**	**375**	**LH**	**01**	**Example of Probe Ordering Product Code**

Probe Element Alloy Chart					
Code	**Description**	**UNS#**	**Code**	**Description**	**UNS#**
375	C1010 Carbon Steel*	G10100	159	316L S.S	S31603
538	5Cr ½Mo	K42544	A12	C276	N10276
541	9Cr 1Mo	K90941	602	Alloy 625	N06625
186	410 S.S	S41000	419	CDA110	C11000
141	304 S.S	S30400	434	CDA443	C44300

*Chemically equivalent to standard pipe grade carbon steels

Note: Not all alloys are available with all element types and seals.
For alloys, sizes, or other special requirements not listed, please contact our sales department.

Electrical Resistance Probe Spare Parts	Product Code
Replacement PTFE Probe Seal (seals probe to hollow plug)	700277
Replacement PEEK Probe Seal (seals probe to hollow plug)	700339
Hollow Plug Bore-Seal Nut, 316 S/S (seals hollow plug when probe is not installed)	700311

A DIVISION OF BAC CORROSION CONTROL

RCSL (A TRADING DIVISION OF BAC CORROSION CONTROL LTD)
STAFFORD PARK 11, TELFORD, SHROPSHIRE, TF3 3AY
T : +44 (0) 1952 290321 E : sales@rcslgroup.com W: www.rcslgroup.com

MEMBER OF MIDROC EUROPE

3.24
Model ER7300
Retrievable Electrical Resistance Probe With Spiral Loop Element
For The High Pressure Two Inch Access Fitting System

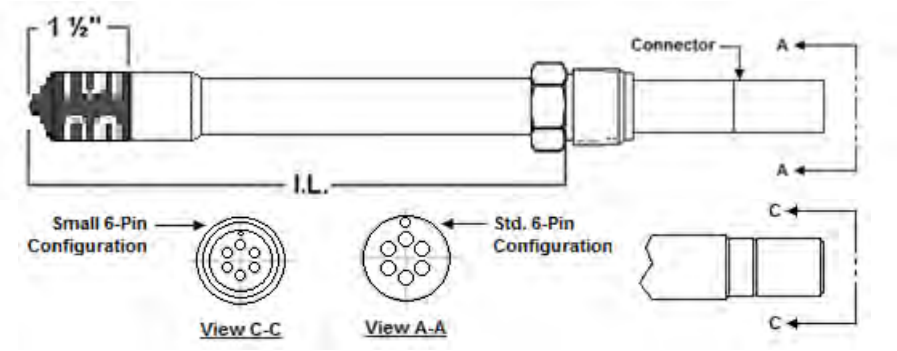

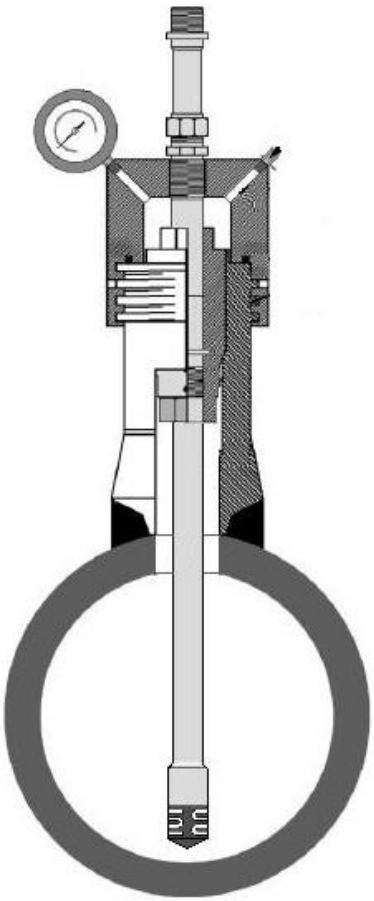

Picture is for illustrative purposes only, other access fitting mounting options are available.

The Model ER7300 spiral loop probe is retrievable, electrical resistance probe designed for use with two inch high pressure access fitting system.

The element is a spiral wound strip encased in epoxy. This approach to element construction offers several advantages over other element geometries:

- High intrinsic resistance – provides highly stable readings with low susceptibility to noise.
- High element strength – allows use in very high flow rate regimes such as a gas transmission.
- Wide spacing of element loops – minimises the risk of iron sulphide scaling and bridging.

While the spiral loop is ideally suited to fast flowing, sour systems, its high stability makes it a suitable choice for oil and gas systems.

The probe assembly consists of an insertion rod with an element, a hermetically sealed six pin connector and a pipe plug with the industry standard 1-14 UNS 2A LH thread.

The pipe plug on the probe screws into the hollow plug nut of the access fitting system. This allows the probe to be installed in the process, using a retriever tool and service valve, without process shutdown.

Insertion length (I.L.) can range from a minimum of 3.75 inch up to any length in ⅛ inch increments.

Several standard elements are available to meet your specific needs. Probe adaptors are available and must be ordered separately.

Specifications	
Probe Body	316 Stainless Steel
Element Seal	Epoxy
Fill Material	Epoxy
Temperature Rating	260°C / 500°F
Pressure Rating	3600 PSI / 245 Barg
Mounting	Two Inch Access Fitting System With Hollow Plug

A DIVISION OF BAC CORROSION CONTROL
RCSL (A TRADING DIVISION OF BAC CORROSION CONTROL LTD)
STAFFORD PARK 11, TELFORD, SHROPSHIRE, TF3 3AY
T : +44 (0) 1952 290321 E : sales@rcslgroup.com W: www.rcslgroup.com
MEMBER OF MIDROC EUROPE

Model ER7300
Retrievable Electrical Resistance Probe With Spiral Loop Element
For The High Pressure Two Inch Access Fitting System

Model ER7300 Ordering Product Code Generation									
HR	Electrical Resistance Probe For Use With The Two Inch Access Fitting System								
	Mounting Material								
	2	316							
	3	C276							
		Connector Type							
		1	Small Connector						
		2	Standard Connector						
			E/R Element Options						
			K	SP10 Spiral Loop - 10 mil thickness (5 mil useful probe life)					
			L	SP20 Spiral Loop - 20 mil thickness (10 mil useful probe life)					
				Seal Type					
				3	Epoxy				
					Length (calculated length rounded down to ⅛ inch increment)				
					XXXX	Length in inches, in 2 decimal place format (e.g. 7.25 inches = 0725)			
						Element Alloy			
						XXX	Use Code in Alloy Chart		
							E/R Probe Options		
							00	No Shield	
								Probe Seal Options	
								01	PTFE
								02	PEEK
HR	**2**	**2**	**K**	**3**	**0725**	**375**	**00**	**01**	**Example of Probe Ordering Product Code**

Probe Element Alloy Chart					
Code	**Description**	**UNS#**	**Code**	**Description**	**UNS#**
375	C1010 Carbon Steel*	G10100	159	316L S.S	S31603
538	5Cr ½Mo	K42544	A12	C276	N10276
541	9Cr 1Mo	K90941	602	Alloy 625	N06625
186	410 S.S	S41000	419	CDA110	C11000
141	304 S.S	S30400	434	CDA443	C44300

*Chemically equivalent to standard pipe grade carbon steels

Note: Not all alloys are available with all element types and seals.
For alloys, sizes, or other special requirements not listed, please contact our sales department.

Electrical Resistance Probe Spare Parts	Product Code
Replacement PTFE Probe Seal (seals probe to hollow plug)	700277
Replacement PEEK Probe Seal (seals probe to hollow plug)	700339
Hollow Plug Bore-Seal Nut, 316 S/S (seals hollow plug when probe is not installed)	700311

A DIVISION OF BAC CORROSION CONTROL
RCSL (A TRADING DIVISION OF BAC CORROSION CONTROL LTD)
STAFFORD PARK 11, TELFORD, SHROPSHIRE, TF3 3AY
T : +44 (0) 1952 290321 E : sales@rcslgroup.com W: www.rcslgroup.com
MEMBER OF MIDROC EUROPE

4.0
Linear Polarisation Resistance (LPR) Corrosion Probes

Sub-Section No.

4.1
Model LP1000
Two Electrode Linear Polarisation Resistance Probe
For Direct Mounting Via 1", 1½" or 2" NPT Pipe Plug

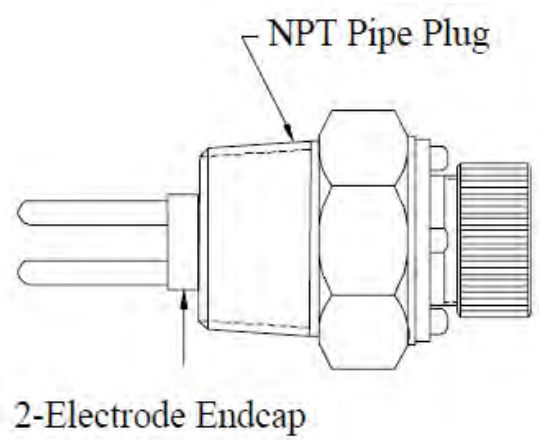

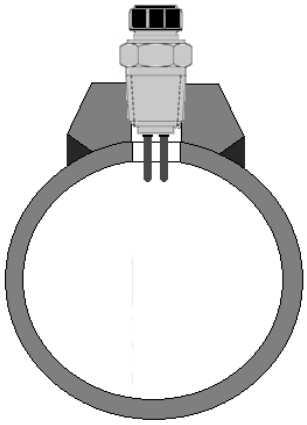

The Model LP1000 is a Linear Polarisation Resistance Probe commonly used in Laboratory, bypass-loop, and field applications. The assembly consists of an NPT pipe plug (1 inch, or 1.5 inch or 2 inch), a two-electrode endcap and a six-pin military connector mounted in place. Electrodes are ordered separately. Several standard electrodes are available to meet your specific needs.

Specifications	
Probe Body	316 Stainless Steel, Carbon Steel or C276
Endcap Seal	Glass
Fill Material	Epoxy
Temperature Rating	260°C / 500°F
Pressure Rating	3000psi/ 204 Bar
Mounting	1 inch, 1½ inch, or 2 inch NPT Pipe Plug

Model LP1000 Ordering Product Code Generation				
LP13	Linear Polarisation 1 inch NPT Pipe Plug Probe			
LP16	Linear Polarisation 2 inch NPT Pipe Plug Probe			
LP17	Linear Polarisation 1½ inch NPT Pipe Plug Probe			
	Probe Body Material			
	2	316		
	3	C.S.		
	4	C276		
		LP Electrode Options		
		20100	Two-electrode integral type with glass seal	
			Options	
			000	None
LP13	**2**	**20100**	**000**	**Example of Probe Ordering Product Code**

Note: For alloys, sizes, or other special requirements not listed, please contact our sales department.

LPR Electrodes

LPR probe electrodes are replaceable and are sold separately.

The LP1000 LPR probe utilises EL400XXX2800000 electrodes.

Please see RCSL's product data sheet for LPR electrodes for ordering information.

A DIVISION OF BAC CORROSION CONTROL
RCSL (A TRADING DIVISION OF BAC CORROSION CONTROL LTD)
STAFFORD PARK 11, TELFORD, SHROPSHIRE, TF3 3AY
T : +44 (0) 1952 290321 E : sales@rcslgroup.com W: www.rcslgroup.com
MEMBER OF MIDROC EUROPE

4.2
Model LP1100
Three Electrode Linear Polarisation Resistance Probe
For Direct Mounting Via 1", 1½" or 2" NPT Pipe Plug

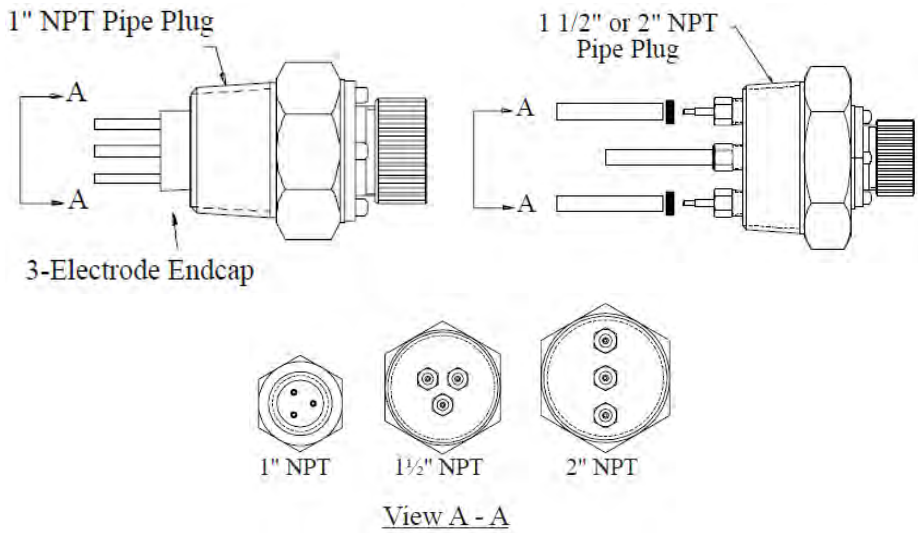

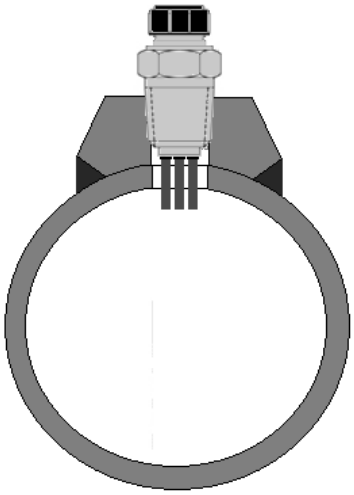

The Model LP1100 is a linear polarisation resistance probe commonly used in laboratory, bypass-loop, and field applications. The assembly consists of a 1 inch, 1 ½ inch, or 2 inch NPT pipe plug and a five-pin military connector mounted in place. Replaceable mounting studs can be ordered with 1 1/2" and 2" pipe plugs. Electrodes are ordered separately. Several standard electrodes are available to meet your specific needs.

Specifications	
Probe Body	316 Stainless Steel
Endcap Seal	Glass
Fill Material	Epoxy
Temperature Rating	260°C / 500°F
Pressure Rating	3000psi / 204 Bar
Mounting	1 inch, 1 ½ inch, or 2 inch NPT Pipe Plug

Model LP1100 Ordering Product Code Generation					
LP13	Linear Polarisation 1 inch NPT Pipe Plug Probe (LP13 cannot be used with replaceable mounting studs)				
LP16	Linear Polarisation 2 inch NPT Pipe Plug Probe				
LP17	Linear Polarisation 1.5 inch NPT Pipe Plug Probe				
	Probe Body Material				
	02	316			
	03	C.S.			
	04	C276			
		LP Electrode Options			
		10	Three-electrode plug type (replaceable mounting studs)		
		30	Three-electrode integral type (non-replacement mounting studs)		
			Seal Type		
			100	Glass	
				Options	
				000	None
LP13	**02**	**30**	**100**	**000**	**Example of Probe Ordering Product Code**

Note: For alloys, sizes, or other special requirements not listed, please contact our sales department.

A DIVISION OF BAC CORROSION CONTROL
RCSL (A TRADING DIVISION OF BAC CORROSION CONTROL LTD)
STAFFORD PARK 11, TELFORD, SHROPSHIRE, TF3 3AY
T : +44 (0) 1952 290321 E : sales@rcslgroup.com W: www.rcslgroup.com
MEMBER OF MIDROC EUROPE

LPR Electrodes

LPR probe electrodes are replaceable and are sold separately.

The LP1100 LPR probe utilises EL412XXX2800000 electrodes. Note that these electrodes vary in length by material, this should be considered when calculating the probe length.

Please see RCSL's product data sheet for LPR electrodes for ordering information.

RCSL (A TRADING DIVISION OF BAC CORROSION CONTROL LTD)
STAFFORD PARK 11, TELFORD, SHROPSHIRE, TF3 3AY
T : +44 (0) 1952 290321 E : sales@rcslgroup.com W: www.rcslgroup.com

4.3
Model LP2000
Two Electrode Linear Polarisation Resistance Probe
For Direct Mounting Via ¾", or 1" NPT Pipe Plug

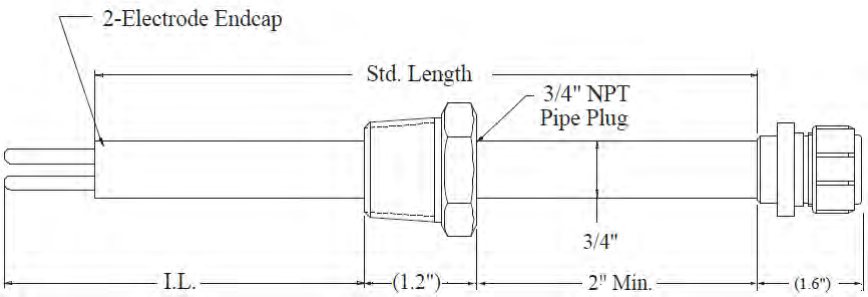

All dimensions are in inches

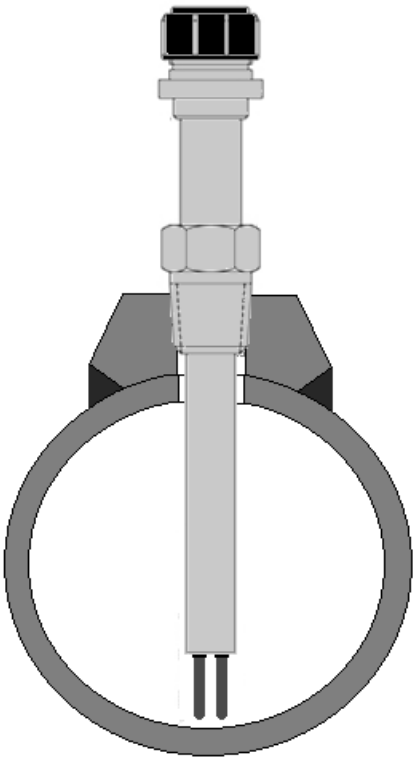

The Model LP2000 is a fixed-length, linear polarisation resistance probe with a ¾" or 1" NPT pipe plug. The probe requires process isolation or process shutdown to install and a threaded pipe fitting to mount.

The probe assembly consists of an insertion rod with a two-electrode endcap, a hermetically sealed connector and an NPT pipe plug which are all welded in place.

The insertion length (I.L.) is calculated to the end of the electrode and can be specified by the customer. For standard probes, the maximum insertion length is given in the chart below.

Electrodes are ordered separately. Several standard electrodes are available to meet your specific needs.

Specifications				
Probe Body	316 Stainless Steel or C276		Order Length	I.L. (max)
Endcap Seal	Glass		6"	4.05"
Fill Material	Epoxy		8"	5.05"
Temperature Rating	260°C / 500°F		12"	10.05"
Pressure Rating	3000psi / 204 Bar		18"	16.05"
Mounting	¾" or 1" NPT Pipe Plug			

A DIVISION OF BAC CORROSION CONTROL
RCSL (A TRADING DIVISION OF BAC CORROSION CONTROL LTD)
STAFFORD PARK 11, TELFORD, SHROPSHIRE, TF3 3AY
T : +44 (0) 1952 290321 E : sales@rcslgroup.com W: www.rcslgroup.com
MEMBER OF MIDROC EUROPE

Model LP2000 Ordering Product Code Generation							
LP2	Linear Polarisation Fixed Length Pipe Plug Probe						
	Pipe Plug Size						
	2	¾ inch NPT					
	3	1 inch NPT					
		Probe Body Material					
		22	316				
		44	C276				
			LP Electrode Options				
			20	Two-electrode integral type			
				Seal Type			
				1	Glass		
					Length		
					06	4.05 inch max. insertion length	
					08	6.05 inch max. insertion length	
					12	10.05 inch max. insertion length	
					18	16.05 inch max. insertion length	
						Options	
						000	None
LP2	**02**	**22**	**20**	**1**	**08**	**000**	**Example of Probe Ordering Product Code**

Note: For alloys, sizes, or other special requirements not listed, please contact our sales department.

LPR Electrodes

LPR probe electrodes are replaceable and are sold separately.

The LP2000 LPR probe utilises EL400XXX2800000 electrodes.

Please see RCSL's product data sheet for LPR electrodes for ordering information.

A DIVISION OF BAC CORROSION CONTROL
RCSL (A TRADING DIVISION OF BAC CORROSION CONTROL LTD)
STAFFORD PARK 11, TELFORD, SHROPSHIRE, TF3 3AY
T : +44 (0) 1952 290321 E : sales@rcslgroup.com W: www.rcslgroup.com
MEMBER OF MIDROC EUROPE

4.4
Model LP2100
Three Electrode Linear Polarisation Resistance Probe
For Direct Mounting Via 1" NPT Pipe Plug

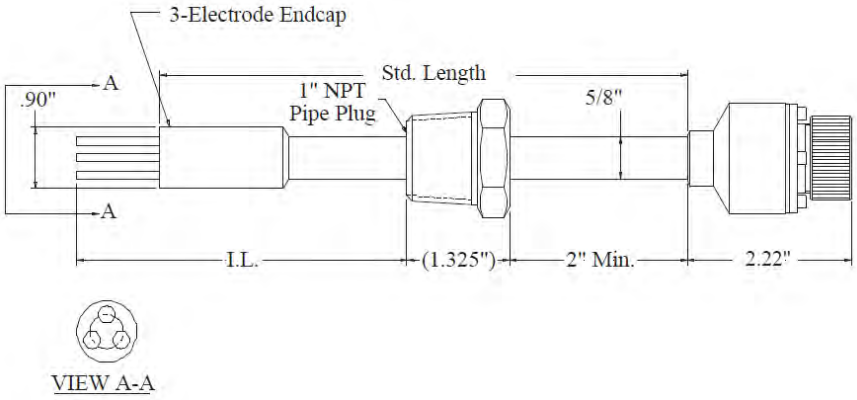

All dimensions are in inches

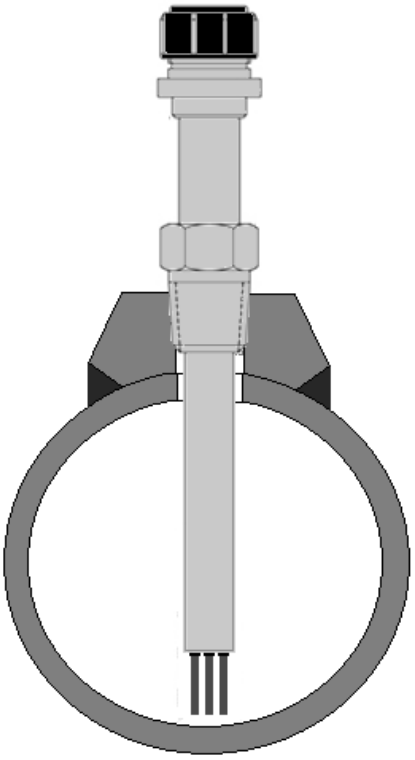

The Model LP2100 is a fixed-length, linear polarisation resistance probe with a 1" NPT pipe plug.

The probe requires process isolation or process shutdown to install and a threaded pipe fitting to mount.

The probe assembly consists of an insertion rod with a three-electrode endcap, a 1" NPT pipe plug and a five-pin military connector mounted in place.

The insertion length (I.L.) is calculated to the end of the electrode and can be specified by the customer. For standard probes, the maximum insertion length is given in the chart below. This maximum I.L. is based on the length of a carbon steel electrode. Electrode lengths may vary depending on the alloy.

Electrodes are ordered separately.

Specifications				
Probe Body	316 Stainless Steel or C276		Order Length	I.L. (max)
Endcap Seal	Glass		8"	5.92"
Fill Material	Epoxy		12"	9.92"
Temperature Rating	260°C / 500°F		18"	15.92"
Pressure Rating	3000psi / 204 Bar			
Mounting	1" NPT Pipe Plug			

A DIVISION OF BAC CORROSION CONTROL
RCSL (A TRADING DIVISION OF BAC CORROSION CONTROL LTD)
STAFFORD PARK 11, TELFORD, SHROPSHIRE, TF3 3AY
T : +44 (0) 1952 290321 E : sales@rcslgroup.com W: www.rcslgroup.com
MEMBER OF MIDROC EUROPE

Model LP2100 Ordering Product Code Generation							
LP2	Linear Polarisation Fixed Length Pipe Plug Probe						
	Pipe Plug Size						
	3	1 inch NPT					
		Probe Body Material					
		22	316				
			LP Electrode Options				
			10	Three-electrode plug type			
			30	Three-electrode integral type			
				Seal Type			
				1	Glass		
					Length		
					08	5.92 inch max. insertion length	
					12	9.92 inch max. insertion length	
					18	15.92 inch max. insertion length	
						Options	
						000	None
LP2	**3**	**22**	**30**	**1**	**08**	**000**	**Example of Probe Ordering #**

For alloys, sizes, or other special requirements not listed, please contact our sales department.

LPR Electrodes

LPR probe electrodes are replaceable and are sold separately.

The LP2100 LPR probe utilises EL412XXX2800000 electrodes. Note that these electrodes vary in length by material, this should be considered when calculating the probe length.

Please see RCSL's product data sheet for LPR electrodes for ordering information.

A DIVISION OF BAC CORROSION CONTROL
RCSL (A TRADING DIVISION OF BAC CORROSION CONTROL LTD)
STAFFORD PARK 11, TELFORD, SHROPSHIRE, TF3 3AY
T : +44 (0) 1952 290321 E : sales@rcslgroup.com W: www.rcslgroup.com
MEMBER OF MIDROC EUROPE

4.5
Model LP3000
Adjustable Two Electrode Linear Polarisation Resistance Probe
For Direct Mounting Via ¾" or 1" NPT Pipe Plug

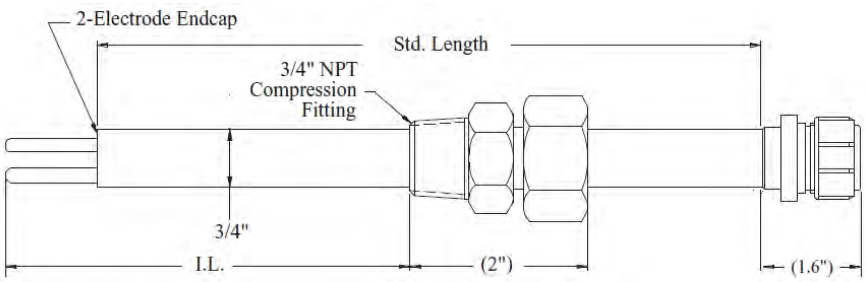

All dimensions are in inches

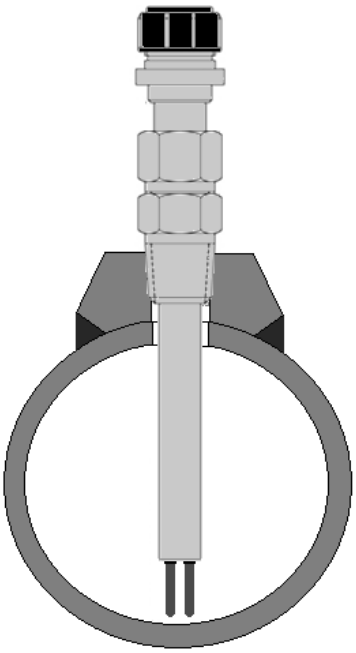

The Model LP3000 is a linear polarization resistance probe commonly used in laboratory, bypass-loop, and field applications.

The assembly consists of a 3/4" NPT compression fitting, an insertion rod with a hermetically sealed two-electrode endcap, and a six-pin connector welded in place.

The insertion length (I.L.) is calculated to the end of the electrode and can be specified by the customer. For standard probes, the maximum insertion length is given in the chart below.

Electrodes are ordered separately. Several standard electrodes are available to meet your specific needs.

Specifications				
Probe Body	316 Stainless Steel		Order Length	I.L. (max)
Endcap Seal	Glass		6"	5.25"
Fill Material	Epoxy		8"	7.25"
Temperature Rating	260°C / 500°F		12"	11.25"
Pressure Rating	1500psi / 102 Bar		18"	17.25"
Mounting	¾" or 1" NPT Pipe Plug			

Model LP3000 Ordering Product Code Generation							
LP3	Linear Polarisation Adjustable Length Pipe Plug Probe						
	Pipe Plug Size						
	2	¾ inch NPT					
	3	1 inch NPT					
		Probe Body Material					
		22	316				
			LP Electrode Options				
			20	Two-electrode integral type			
				Seal Type			
				1	Glass		
					Length		
					6	5.25 inch max. insertion length	
					8	7.25 inch max. insertion length	
					12	11.25 inch max. insertion length	
					18	17.25 inch max. insertion length	
						Options	
						000	None
LP3	**2**	**22**	**20**	**1**	**8**	**000**	**Example of Probe Ordering Product Code**

Note: For alloys, sizes, or other special requirements not listed, please contact our sales department.

A DIVISION OF BAC CORROSION CONTROL
RCSL (A TRADING DIVISION OF BAC CORROSION CONTROL LTD)
STAFFORD PARK 11, TELFORD, SHROPSHIRE, TF3 3AY
T : +44 (0) 1952 290321 E : sales@rcslgroup.com W: www.rcslgroup.com
MEMBER OF MIDROC EUROPE

LPR Electrodes

LPR probe electrodes are replaceable and are sold separately.

The LP3000 LPR probe utilises EL400XXX2800000 electrodes.

Please see RCSL's product data sheet for LPR electrodes for ordering information.

RCSL (A TRADING DIVISION OF BAC CORROSION CONTROL LTD)
STAFFORD PARK 11, TELFORD, SHROPSHIRE, TF3 3AY
T : +44 (0) 1952 290321 E : sales@rcslgroup.com W: www.rcslgroup.com

4.6
Model LP3010
Adjustable Two Electrode Linear Polarisation Resistance Probe
For Direct Mounting Via ¾" Pipe Plug

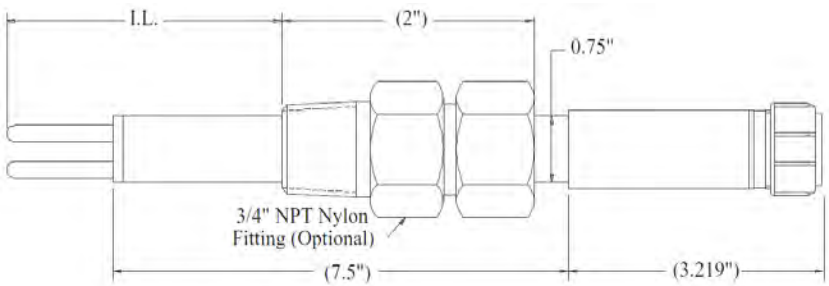

All dimensions are in inches

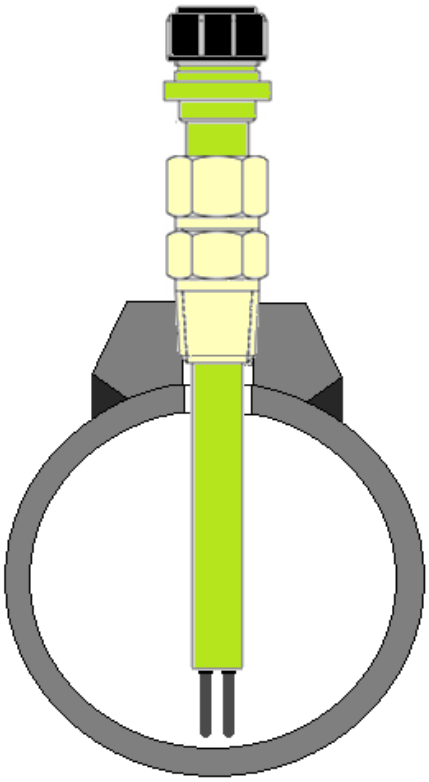

The Model LP3010 is a linear polarization resistance probe commonly used in laboratory, bypass-loop, and field applications.

The probe (with additional instrumentation) can be used to monitor corrosion rates, evaluate materials, and screen corrosion inhibitors.

The assembly consists of a glass epoxy probe with an optional 3/4" NPT nylon compression fitting for insertion into the system.

The studs for mounting the electrodes and the six-pin connector are held in place by the epoxy fill material.

The maximum insertion length (I.L.) is 6.75" when the compression fitting is used and 8.75" when the fitting is not used.

Electrodes are ordered separately.

Specifications	
Probe Body	Glass Epoxy
Endcap Seal	Epoxy
Fill Material	Epoxy
Temperature Rating **(with Nylon compression fitting)** **(without Nylon compression fitting)**	 65°C / 150°F 150°C/ 300°F
Pressure Rating	100psi / 7 Bar
Mounting	¾ inch Pipe Plug

A DIVISION OF BAC CORROSION CONTROL
RCSL (A TRADING DIVISION OF BAC CORROSION CONTROL LTD)
STAFFORD PARK 11, TELFORD, SHROPSHIRE, TF3 3AY
T : +44 (0) 1952 290321 E : sales@rcslgroup.com W: www.rcslgroup.com
MEMBER OF MIDROC EUROPE

Model LP3010 Ordering Product Code Generation								
LP3	Linear Polarisation Adjustable Length Pipe Plug Probe							
LP0	Linear Polarisation Insertion Rod							
	Pipe Plug Size							
	0	N/A (when ordering only Insertion Rod – LP0)						
	2	¾ inch NPT						
		Probe Body Material						
		7	Epoxy					
			Mount (Pipe Plug) Material					
			0	N/A (when ordering only Insertion Rod – LP0)				
			E	Nylon				
				LP Electrode Options				
				20	Two-electrode integral type			
					Seal Type			
					3	Epoxy		
						Length		
						11	11 inch	
							Options	
							000	None
LP3	**2**	**7**	**E**	**20**	**3**	**11**	**000**	**Example of Probe Ordering Product Code**

LPR Electrodes

LPR probe electrodes are replaceable and are sold separately.

The LP3010 LPR probe utilises EL400XXX2800000 electrodes.

Please see RCSL's product data sheet for LPR electrodes for ordering information.

A DIVISION OF BAC CORROSION CONTROL
RCSL (A TRADING DIVISION OF BAC CORROSION CONTROL LTD)
STAFFORD PARK 11, TELFORD, SHROPSHIRE, TF3 3AY
T : +44 (0) 1952 290321 E : sales@rcslgroup.com W: www.rcslgroup.com
MEMBER OF MIDROC EUROPE

4.7
Model LP3100
Adjustable Three Electrode Linear Polarisation Resistance Probe
For Direct Mounting Via 1" NPT Pipe Plug

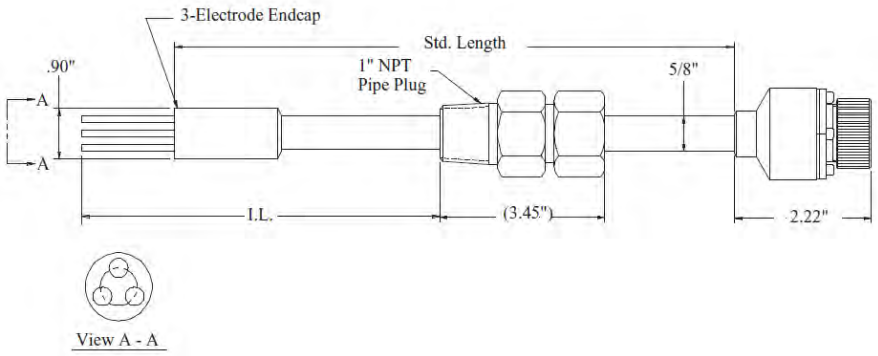

All dimensions are in inches

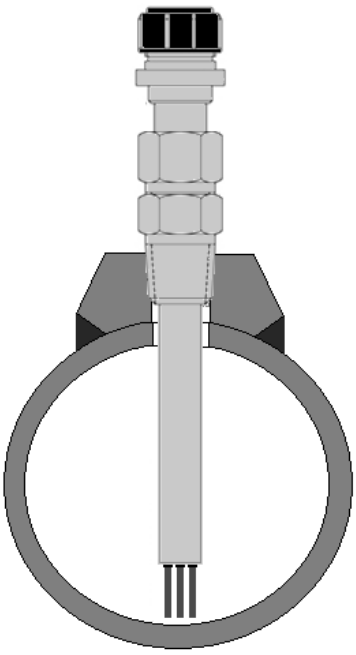

The Model LP3100 is a linear polarisation resistance probe commonly used in laboratory, bypass-loop, and field applications.

The assembly consists of a 1" NPT compression fitting, an insertion rod with a hermetically sealed three-electrode endcap, and a five-pin military connector mounted in place.

The insertion length (I.L.) is calculated to the end of the electrode and can be specified by the customer. For standard probes, the maximum insertion length is given in the chart below.

This maximum I.L. is based on the length of a carbon steel electrode. Electrode lengths may vary depending on the alloy.

Electrodes are ordered separately. Several standard electrodes are available to meet your specific needs.

Specifications				
Probe Body	316 Stainless Steel		Order Length	I.L. (max)
Endcap Seal	Glass		8"	5.8"
Fill Material	Epoxy		12"	9.8"
Temperature Rating	260°C / 500°F		18"	15.8"
Pressure Rating	1500psi / 102 Bar			
Mounting	1" NPT Pipe Plug			

A DIVISION OF BAC CORROSION CONTROL
RCSL (A TRADING DIVISION OF BAC CORROSION CONTROL LTD)
STAFFORD PARK 11, TELFORD, SHROPSHIRE, TF3 3AY
T : +44 (0) 1952 290321 E : sales@rcslgroup.com W: www.rcslgroup.com
MEMBER OF MIDROC EUROPE

Model LP3100 Ordering Product Code Generation							
LP3	Linear Polarisation Adjustable Length Pipe Plug Probe						
	Pipe Plug Size						
	3	1 inch NPT					
		Probe Body Material					
		22	316				
			LP Electrode Options				
			10	Three-electrode plug type			
			30	Three-electrode integral type			
				Seal Type			
				1	Glass		
					Length		
					08	5.8 inch max. insertion length	
					12	9.8 inch max. insertion length	
					18	15.8 inch max. insertion length	
						Options	
						000	None
LP3	**3**	**22**	**30**	**1**	**08**	**000**	**Example of Probe Ordering Product Code**

Note: For alloys, sizes, or other special requirements not listed, please contact our sales department.

LPR Electrodes

LPR probe electrodes are replaceable and are sold separately.

The LP3100 LPR probe utilises EL412XXX2800000 electrodes. Note that these electrodes vary in length by material, this should be considered when calculating the probe length.

Please see RCSL's product data sheet for LPR electrodes for ordering information.

A DIVISION OF BAC CORROSION CONTROL
RCSL (A TRADING DIVISION OF BAC CORROSION CONTROL LTD)
STAFFORD PARK 11, TELFORD, SHROPSHIRE, TF3 3AY
T : +44 (0) 1952 290321 E : sales@rcslgroup.com W: www.rcslgroup.com
MEMBER OF MIDROC EUROPE

4.8
Model LP4000
Retractable Two Electrode Linear Polarisation Resistance Probe
For The Low Pressure Retractable System

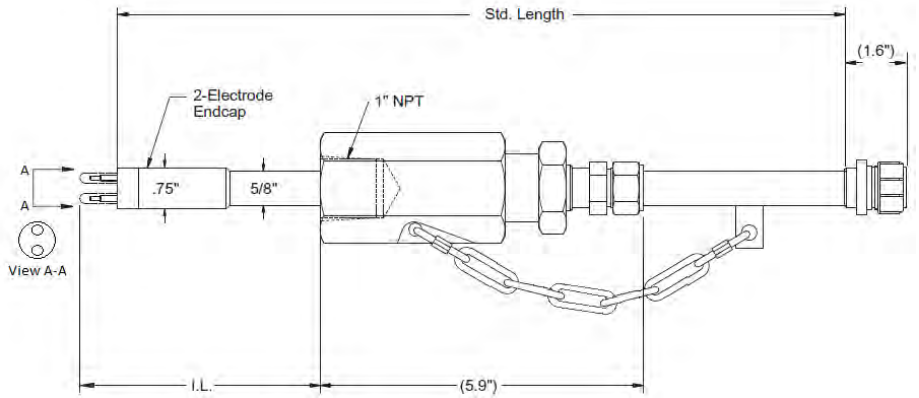

All dimensions are in inches

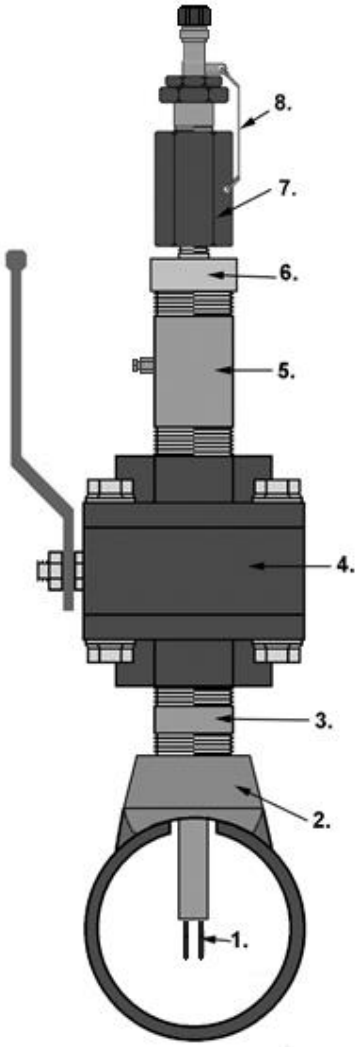

Picture is for illustrative purposes only, flanged connection is also available

The Model LP4000 is a retractable, linear polarisation resistance probe commonly used in field and plant applications. A specially designed packing gland is used with the probe for insertion into or retraction from a pressurised system without a process shutdown.

The probe is designed to mount easily on a 1" piping system, but it can be modified for your specific mounting requirements.

The probe assembly consists of a packing gland, an insertion rod with a hermetically sealed three-electrode endcap, and a hermetically sealed six-pin connector.

The retractable design allows the probe to be installed into and removed from a pressurised system without a process shutdown and it allows the insertion length (I.L.) to be adjusted by the installer.

Key	
1 – Probe Electrodes	5 – TBE Pipe Nipple (usually fitted with bleed valve)
2 – Thredo-let (flanged connection is available)	6 – Thread adaptor (if required)
3 – TBE Pipe Nipple	7 – Packing gland
4 – Full Bore Ball Valve (flanged connection is available)	8 – Safety chain
	Items 1-6 are supplied separately from the LP4000

The packing system features a built-in mechanical stop to secure the rod in place during service. The system also utilises an adjustable safety chain system which serves as an additional mechanical stop and eliminates the need for cumbersome safety frames in most cases.

A variety of probe lengths are available to meet your specific needs (see Ordering Information). Electrodes are available in a wide variety of alloys and are sold separately (see Optional Accessories).

Specifications				
Probe Body Material	316 Stainless Steel or C276*		Order Length	I.L. (max)
End Cap Seal	Glass		24"	17.53"
Fill Material	Epoxy		30"	23.53"
Packing Material	Teflon® (standard) or Grafoil		36"	29.53"
Temperature Rating	260°C / 500°F Teflon®		42"	35.53"
Pressure Rating	2000 PSI / 138 Barg**			
Mounting	Minimum 1" Full Bore Valve			

* Other material options are available

** Easy Tool (Product Code: SR2159-ERXX) is recommended for insertion or retraction in systems with pressure over 150 psi

A DIVISION OF BAC CORROSION CONTROL
RCSL (A TRADING DIVISION OF BAC CORROSION CONTROL LTD)
STAFFORD PARK 11, TELFORD, SHROPSHIRE, TF3 3AY
T : +44 (0) 1952 290321 E : sales@rcslgroup.com W: www.rcslgroup.com
MEMBER OF MIDROC EUROPE

Model LP4000 Ordering Product Code Generation						
LP45	Linear Polarisation 1 inch Female NPT Probe, Packing Gland with Teflon®					
LP75	Linear Polarisation 1 inch Female NPT Probe, Packing Gland with Grafoil®					
	Probe Body Material					
	22	316				
	44	C276				
		LP Electrode Options				
		20	Two-electrode integral type			
			Seal Type			
			1	Glass		
				Length		
				24	17.53 inch max. insertion length	
				30	23.53 inch max. insertion length	
				36	29.53 inch max. insertion length	
				42	35.53 inch max. insertion length	
					Options	
					000	None
LP45	**22**	**20**	**1**	**24**	**000**	**Example of Probe Ordering Product Code**

Note: For alloys, sizes, or other special requirements not listed, please contact our sales department.

LPR Electrodes

LPR probe electrodes are replaceable and are sold separately.

The LP4000 LPR probe utilises EL400XXX2800000 electrodes.

Please see RCSL's product data sheet for LPR electrodes for ordering information.

Safety Clamp

Safety clamps are available separately, these provide additional support to the packing gland and safety chain to control the positioning of the coupons within the pipe.

Safety Clamp Assembly Product Code:	
PS5463141**XX**	Replace XX with Length, e.g. PS5463141**24**

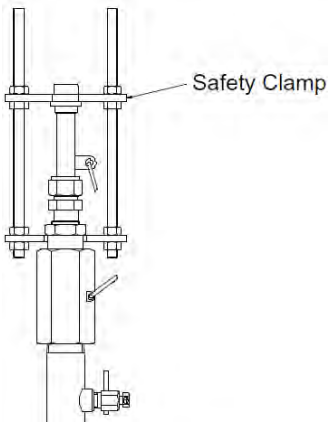

RCSL (A TRADING DIVISION OF BAC CORROSION CONTROL LTD)
STAFFORD PARK 11, TELFORD, SHROPSHIRE, TF3 3AY
T : +44 (0) 1952 290321 E : sales@rcslgroup.com W: www.rcslgroup.com

4.9
Model LP4100
Retractable Three Electrode Linear Polarisation Resistance Probe
For The Low Pressure Retractable System

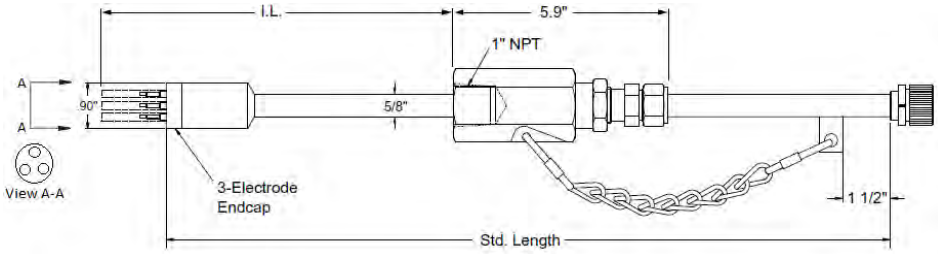

All dimensions are in inches

The Model LP4100 is a retractable, linear polarization resistance probe commonly used in field and plant applications

The probe is designed to mount easily on a 1" piping system, but it can be modified for your specific mounting requirements.

The probe assembly consists of a packing gland, an insertion rod with a hermetically sealed three-electrode endcap, and a hermetically sealed six-pin connector.

The retractable design allows the probe to be installed into and removed from a pressurised system without a process shutdown and it allows the insertion length (I.L.) to be adjusted by the installer.

The packing system features a built-in mechanical stop to secure the rod in place during service. The system also utilises an adjustable safety chain system which serves as an additional mechanical stop and eliminates the need for cumbersome safety frames in most cases.

A variety of probe lengths are available to meet your specific needs (please see the ordering information on the next page).

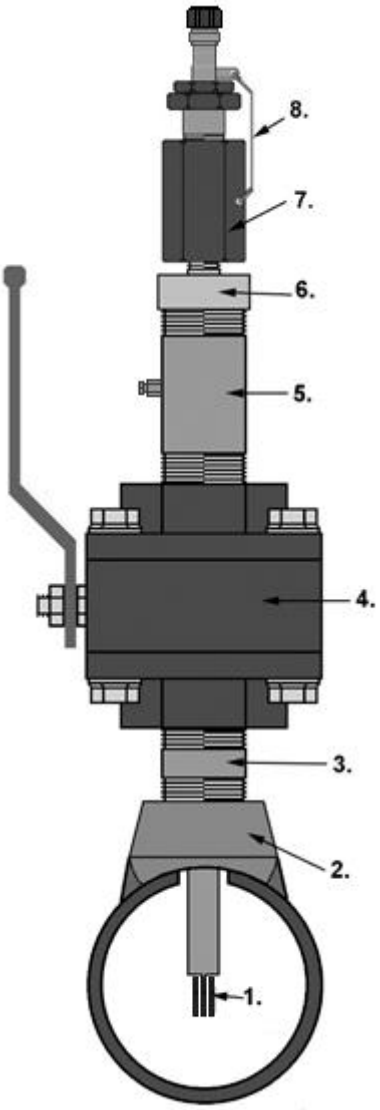

Picture is for illustrative purposes only, flanged connection is also available

Key	
1 – Probe Electrodes	5 – TBE Pipe Nipple (usually fitted with bleed valve)
2 – Thredo-let (flanged connection is available)	6 – Thread adaptor (if required)
3 – TBE Pipe Nipple	7 – Packing gland
4 – Full Bore Ball Valve (flanged connection is available)	8 – Safety chain
	Items 1-6 are supplied separately from the LP4100

Electrodes are available in a wide variety of alloys and are sold separately. Please note that the electrodes for use with this probe vary in length by material, please review RCSL's LPR Electrode data sheet for more information.

Specifications				
Probe Body Material	316 Stainless Steel or C276		Order Length	I.L. (max)
End Cap Seal	Glass		24"	17.53"
Fill Material	Epoxy		30"	23.53"
Packing Material	Teflon® (standard) or Grafoil		36"	29.53"
Temperature Rating	260°C / 500°F Teflon®		42"	35.53"
Pressure Rating	2000 PSI / 138 Barg**			
Mounting	Minimum 1" Full Bore Valve			

* Other material options are available

** Easy Tool (Product Code: SR2159-ERXX) is recommended for insertion or retraction in systems with pressure over 150 psi

A DIVISION OF BAC CORROSION CONTROL
RCSL (A TRADING DIVISION OF BAC CORROSION CONTROL LTD)
STAFFORD PARK 11, TELFORD, SHROPSHIRE, TF3 3AY
T : +44 (0) 1952 290321 E : sales@rcslgroup.com W: www.rcslgroup.com
MEMBER OF MIDROC EUROPE

Model LP4100 Ordering Product Code Generation						
LP45	Linear Polarisation 1 inch Female NPT Probe, Packing Gland w/ Teflon® (for integral type)					
LP75	Linear Polarisation 1 inch Female NPT Probe, Packing Gland w/ Grafoil® (for integral type)					
LPB7	Linear Polarisation 1 inch Female NPT Probe, Packing Gland w/ Teflon® (for plug type)					
LPC7	Linear Polarisation 1 inch Female NPT Probe, Packing Gland w/ Grafoil® (for plug type)					
	Probe Body Material					
	22	316				
	44	C276				
		LP Electrode Options				
		30	Three-electrode integral type			
			Seal Type			
			1	Glass		
				Length		
				24	17.53 inch max. insertion length	
				30	23.53 inch max. insertion length	
				36	29.53 inch max. insertion length	
				42	35.53 inch max. insertion length	
					Options	
					000	None
LP45	**22**	**30**	**1**	**24**	**000**	**Example of Probe Ordering Product Code**

Note: For alloys, sizes, or other special requirements not listed, please contact our sales department.

LPR Electrodes

LPR probe electrodes are replaceable and are sold separately.

The LP4100 LPR probe utilises EL412XXX2800000 electrodes. Note that these electrodes vary in length by material, this should be considered when calculating the probe length.

Please see RCSL's product data sheet for LPR electrodes for ordering information.

Safety Clamp

Safety clamps are available separately, these provide additional support to the packing gland and safety chain to control the positioning of the coupons within the pipe.

Safety Clamp Assembly Product Code:	
PS5463141**XX**	Replace XX with Length, e.g. PS5463141**24**

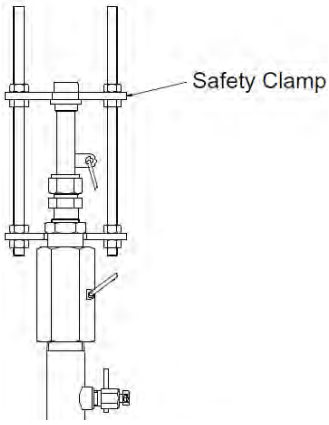

A DIVISION OF BAC CORROSION CONTROL
RCSL (A TRADING DIVISION OF BAC CORROSION CONTROL LTD)
STAFFORD PARK 11, TELFORD, SHROPSHIRE, TF3 3AY
T : +44 (0) 1952 290321 E : sales@rcslgroup.com W: www.rcslgroup.com
MEMBER OF MIDROC EUROPE

Model LP4300

Retractable Three Electrode Linear Polarisation Resistance Probe

For The Low Pressure Retractable System

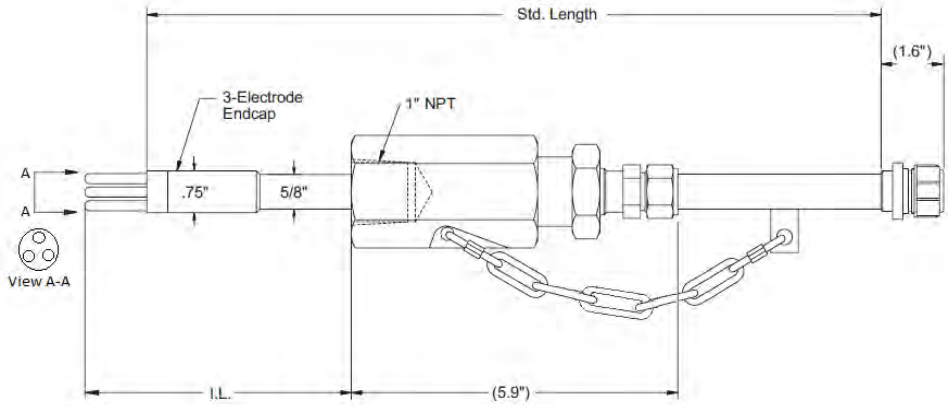

All dimensions are in inches

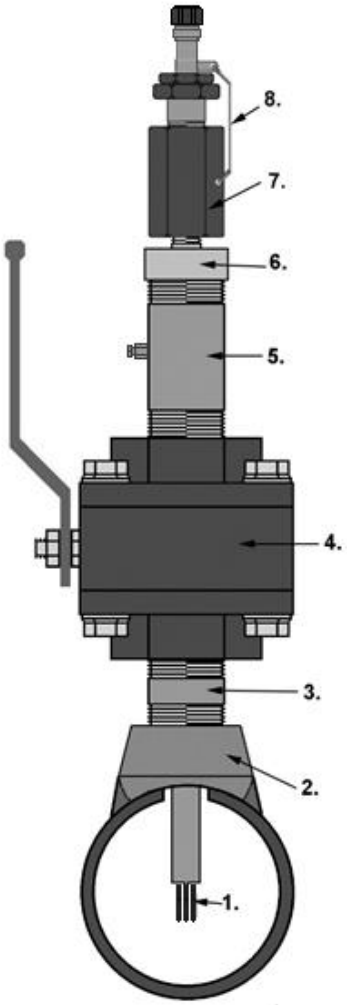

Picture is for illustrative purposes only, flanged connection is also available

The Model LP4300 is a retractable, linear polarisation resistance probe specifically designed for use with CorrTran and SmartCET style instruments.

The probe is designed to mount easily on a 1" piping system, but it can be modified for your specific mounting requirements.

The probe assembly consists of a packing gland, an insertion rod with a hermetically sealed three-electrode endcap, and a hermetically sealed six-pin connector.

The retractable design allows the probe to be installed into and removed from a pressurised system without a process shutdown and it allows the insertion length (I.L.) to be adjusted by the installer.

Key	
1 – Probe Electrodes	5 – TBE Pipe Nipple (usually fitted with bleed valve)
2 – Thredo-let (flanged connection is available)	6 – Thread adaptor (if required)
3 – TBE Pipe Nipple	7 – Packing gland
4 – Full Bore Ball Valve (flanged connection is available)	8 – Safety chain
	Items 1-6 are supplied separately from the LP4300

The packing system features a built-in mechanical stop to secure the rod in place during service. The system also utilises an adjustable safety chain system which serves as an additional mechanical stop and eliminates the need for cumbersome safety frames in most cases.

A variety of probe lengths are available to meet your specific needs (please see the ordering information on the next page).

Electrodes are available in a wide variety of alloys and are sold separately.

Specifications				
Probe Body Material	316 Stainless Steel or C276		Order Length	I.L. (max)
End Cap Seal	Glass		24"	17.53"
Fill Material	Epoxy		30"	23.53"
Packing Material	Teflon® (standard) or Grafoil		36"	29.53"
Temperature Rating	260°C / 500°F Teflon®		42"	35.53"
Pressure Rating	2000 PSI / 138 Barg**			
Mounting	Minimum 1" Full Bore Valve			

* Other material options are available

** Easy Tool (Product Code: SR2159-ERXX) is recommended for insertion or retraction in systems with pressure over 150 psi

A DIVISION OF BAC CORROSION CONTROL

RCSL (A TRADING DIVISION OF BAC CORROSION CONTROL LTD)
STAFFORD PARK 11, TELFORD, SHROPSHIRE, TF3 3AY
T : +44 (0) 1952 290321 E : sales@rcslgroup.com W: www.rcslgroup.com

MEMBER OF MIDROC EUROPE

Model LP4300 Ordering Product Code Generation						
LP45	Linear Polarisation 1 inch Female NPT Probe, Packing Gland w/ Teflon®					
LP75	Linear Polarisation 1 inch Female NPT Probe, Packing Gland w/ Grafoil®					
	Probe Body Material					
	22	316				
	44	C276				
		LP Electrode Options				
		H0	Three-electrode CorrTran Style			
			Seal Type			
			1	Glass		
				Length		
				24	17.53 inch max. insertion length	
				30	23.53 inch max. insertion length	
				36	29.53 inch max. insertion length	
				42	35.53 inch max. insertion length	
					Options	
					000	None
LP45	**22**	**H0**	**1**	**24**	**000**	**Example of Probe Ordering Product Code**

Note: For alloys, sizes, or other special requirements not listed, please contact our sales department.

LPR Electrodes

LPR probe electrodes are replaceable and are sold separately.

The LP4300 LPR probe utilises EL525XXX2800XX electrodes.

Please see RCSL's product data sheet for LPR electrodes for ordering information.

Safety Clamp

Safety clamps are available separately, these provide additional support to the packing gland and safety chain to control the positioning of the coupons within the pipe.

Safety Clamp Assembly Product Code:	
PS5463141**XX**	Replace XX with Length, e.g. PS5463141**24**

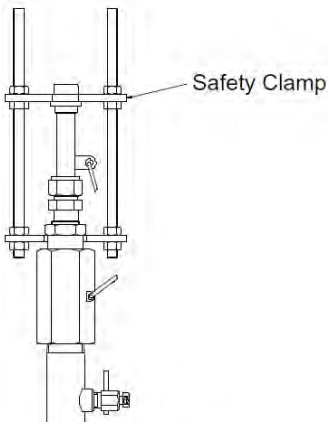

RCSL (A TRADING DIVISION OF BAC CORROSION CONTROL LTD)
STAFFORD PARK 11, TELFORD, SHROPSHIRE, TF3 3AY
T : +44 (0) 1952 290321 E : sales@rcslgroup.com W: www.rcslgroup.com

4.11
Model LP6000
Two Electrode Linear Polarisation Resistance Probe
For Direct Mounting Via Flanged Branch

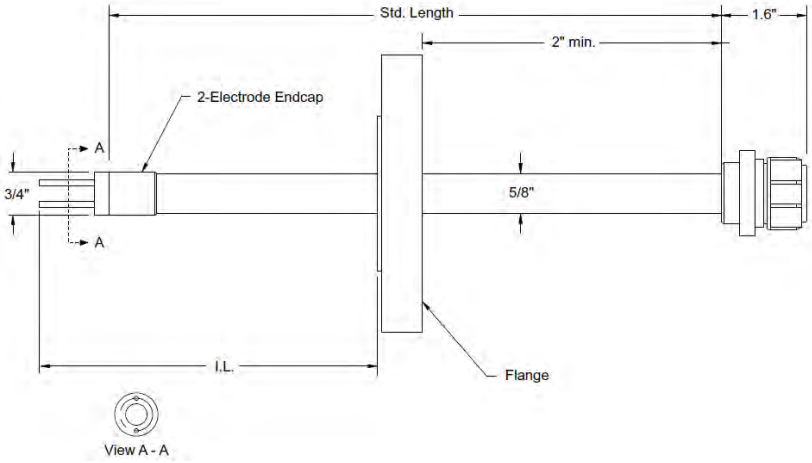

All dimensions are in inches

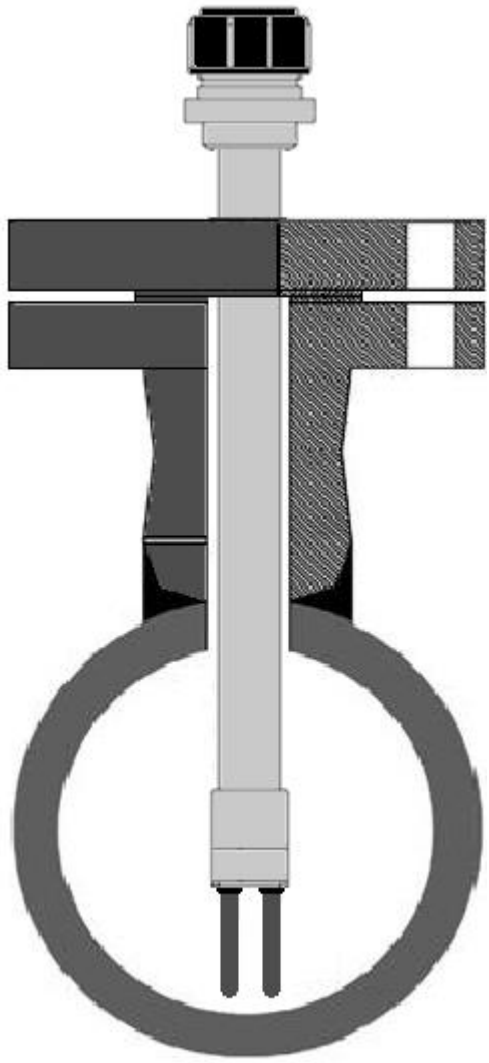

The Model LP6000 is a fixed-length, flange-mounted, linear polarisation resistance probe. The probe is ideally suited for use in high pressure and/or hazardous applications where threaded fittings are not available or not recommended.

Process shutdown or process isolation is required for installation and inspection.

The probe assembly consists of an insertion rod with a two-electrode endcap, a hermetically sealed connector, and a flange (as specified by customer), which are all welded in place.

Insertion length (I.L.) is calculated to the end of the electrodes and, in this case, is based on a 1" total flange thickness. Customers can specify any length required. For standard probes, the maximum insertion length is given in the chart below.

Electrodes are ordered separately. Several standard electrodes are available to meet your specific needs.

Specifications				
Probe Body	316 Stainless Steel or C276		Order Length	I.L. (max)
Endcap Seal	Glass		12"	10.12"
Fill Material	Epoxy		18"	16.12"
Temperature Rating	260°C / 500°F		24"	22.12"
Pressure Rating	Per flange pressure rating			
Mounting	Flanged branch			

A DIVISION OF BAC CORROSION CONTROL
RCSL (A TRADING DIVISION OF BAC CORROSION CONTROL LTD)
STAFFORD PARK 11, TELFORD, SHROPSHIRE, TF3 3AY
T : +44 (0) 1952 290321 E : sales@rcslgroup.com W: www.rcslgroup.com
MEMBER OF MIDROC EUROPE

Model LP6000 Ordering Product Code Generation								
LP6	Linear Polarisation Fixed Length Pipe Probe with Flange							
	Flange Size							
	1	1 inch Flange						
	2	1 ½” inch Flange						
	3	2 inch Flange						
	4	3 inch Flange						
	5	4 inch Flange						
	7	6 inch Flange						
	8	2 ½” inch Flange						
	9	¾” inch Flange						
		Probe Body Material						
		22	316					
		44	C276					
			LP Electrode Options					
			2	Two-electrode integral type				
				Flange Pressure Rating				
				1	150 lb.	As standard the flange is ANSI RF ANSI RTJ and API are available to special order		
				2	300 lb.			
				3	600 lb.			
				5	1500 lb.			
				6	900 lb.			
				7	2500 lb.			
					Seal Type			
					1	Glass		
						Length		
						12	10.12” inches max. insertion length	
						18	16.12” inches max. insertion length	
						24	22.12” inches max. insertion length	
							Options	
							000	None
LP6	**2**	**22**	**2**	**1**	**1**	**12**	**000**	**Example of Probe Ordering Product Code**

Note: For alloys, sizes, or other special requirements not listed, please contact our sales department.

LPR Electrodes

LPR probe electrodes are replaceable and are sold separately.

The LP6000 LPR probe utilises EL400XXX2800000 electrodes.

Please see RCSL’s product data sheet for LPR electrodes for ordering information.

A DIVISION OF BAC CORROSION CONTROL
RCSL (A TRADING DIVISION OF BAC CORROSION CONTROL LTD)
STAFFORD PARK 11, TELFORD, SHROPSHIRE, TF3 3AY
T : +44 (0) 1952 290321 E : sales@rcslgroup.com W: www.rcslgroup.com
MEMBER OF MIDROC EUROPE

4.12
Model LP6100
Three Electrode Linear Polarisation Resistance Probe
For Direct Mounting Via Flanged Branch

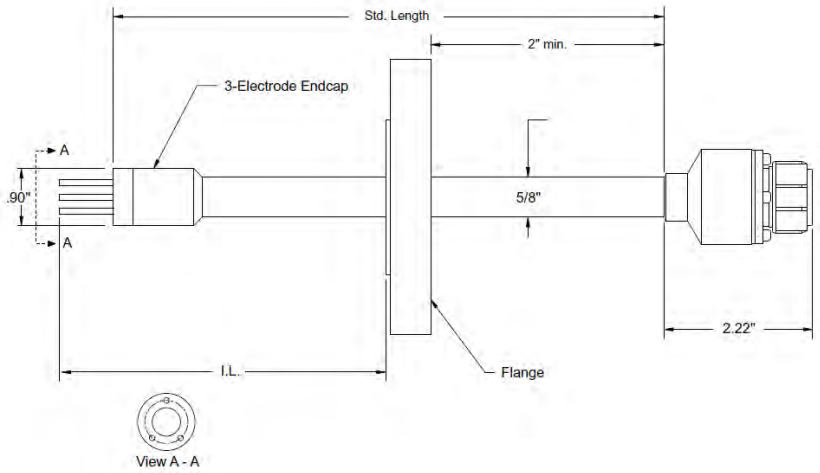

All dimensions are in inches

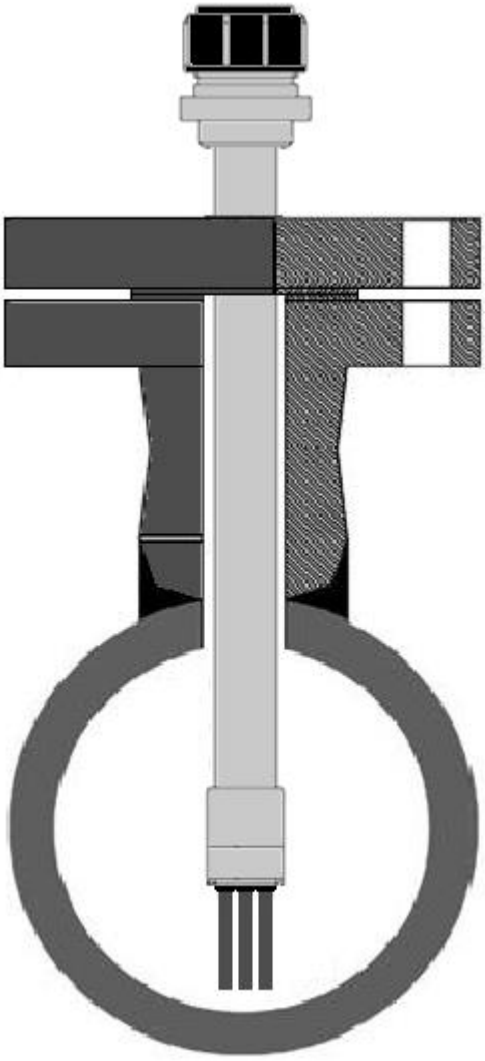

The Model LP6100 is a fixed-length, flange-mounted, linear polarisation resistance probe. The probe is ideally suited for use in high pressure and/or hazardous applications where threaded fittings are not available or not recommended.

Process shutdown or process isolation is required for installation and inspection.

The probe assembly consists of an insertion rod with a three-electrode endcap, a hermetically sealed connector, and a flange (as specified by customer), which are all welded in place.

Insertion length (I.L.) is calculated to the end of the electrodes and, in this case, is based on a 1" total flange thickness. Customers can specify any length required. For standard probes, the maximum insertion length is given in the chart below.

Electrodes are ordered separately. Several standard electrodes are available to meet your specific needs.

Specifications				
Probe Body	316 Stainless Steel or C276		Order Length	I.L. (max)
Endcap Seal	Glass		12"	10.25"
Fill Material	Epoxy		18"	16.25"
Temperature Rating	260°C / 500°F		24"	22.25"
Pressure Rating	Per flange pressure rating			
Mounting	Flanged branch			

A DIVISION OF BAC CORROSION CONTROL
RCSL (A TRADING DIVISION OF BAC CORROSION CONTROL LTD)
STAFFORD PARK 11, TELFORD, SHROPSHIRE, TF3 3AY
T : +44 (0) 1952 290321 E : sales@rcslgroup.com W: www.rcslgroup.com
MEMBER OF MIDROC EUROPE

Model LP6100 Ordering Product Code Generation								
LP6	Linear Polarisation Fixed Length Probe with Flange							
	Flange Size							
	1	1 inch Flange						
	2	1 ½ inch Flange						
	3	2 inch Flange						
	4	3 inch Flange						
	5	4 inch Flange						
	7	6 inch Flange						
	8	2 ½ inch Flange						
		Probe Body Material						
		22	316					
			LP Electrode Options					
			10	Three-electrode plug type				
			30	Three-electrode integral type				
				Flange Pressure Rating				
				1	150 lb.	As standard the flange is ANSI RF ANSI RTJ and API are available to special order		
				2	300 lb.			
				3	600 lb.			
				5	1500 lb.			
				6	900 lb.			
				7	2500 lb.			
					Seal Type			
					1	Glass		
						Length		
						12	10.25 inches max. insertion length	
						18	16.25 inches max. insertion length	
						24	22.25 inches max. insertion length	
							Options	
							000	None
LP6	**2**	**22**	**30**	**1**	**1**	**18**	**000**	**Example of Probe Ordering Product Code**

Note: For alloys, sizes, or other special requirements not listed, please contact our sales department.

LPR Electrodes

LPR probe electrodes are replaceable and are sold separately.

The LP6100 LPR probe utilises EL412XXX2800000 electrodes.

Please see RCSL's product data sheet for LPR electrodes for ordering information.

A DIVISION OF BAC CORROSION CONTROL
RCSL (A TRADING DIVISION OF BAC CORROSION CONTROL LTD)
STAFFORD PARK 11, TELFORD, SHROPSHIRE, TF3 3AY
T : +44 (0) 1952 290321 E : sales@rcslgroup.com W: www.rcslgroup.com
MEMBER OF MIDROC EUROPE

4.13
Model LP7000
Retrievable Two Electrode Linear Polarisation Resistance Probe
For The High Pressure Two Inch Access Fitting System

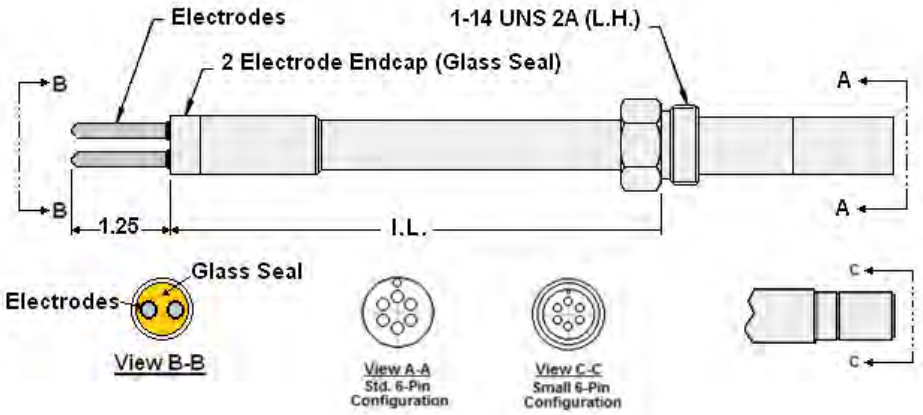

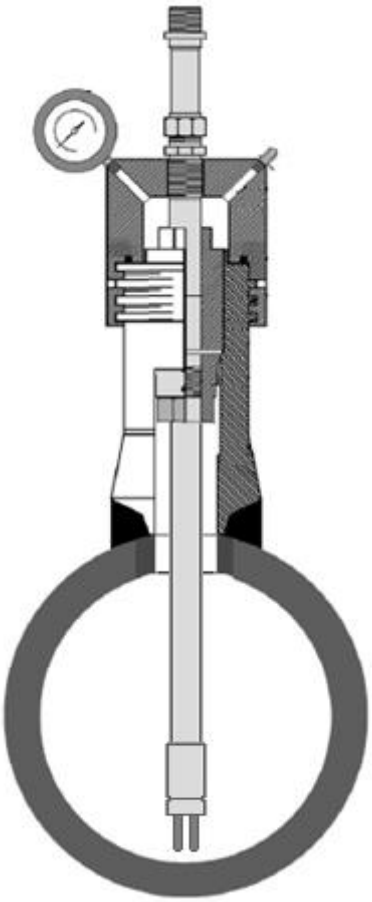

Picture is for illustrative purposes only, other access fitting mounting options are available

The Model LP7000 is a fixed-length, linear polarisation resistance probe for use with the two inch access fitting system at high pressure and high temperature.

The probe assembly consists of an insertion rod with a hermetically sealed two-electrode endcap with 2x 4-40 UNC mounting studs, a hermetically sealed six pin connector and a pipe plug with the industry standard 1-14 UNS 2A LH thread.

The pipe plug on the probe screws into the hollow plug nut of the access system. This allows the probe to be installed in the process, using a retriever tool and service valve, without process shutdown.

The insertion length (I.L.) can range from 3" up to any length specified by the customer in ⅛" increments, note that this includes 1.25" for the length of the electrode.

Several standard electrodes are available to meet your specific needs. Probe adaptors are also available and must be ordered separately.

Specifications	
Probe Body	316 Stainless Steel or C276
Endcap Seal	Glass
Fill Material	Epoxy
Temperature Rating	260°C / 500°F
Pressure Rating	3600psi / 245 Bar
Mounting	Two inch Access Fitting System With Hollow Plug

Linear Polarisation Probe Spare Parts	Product Code
Replacement PTFE Probe Seal (seals probe to hollow plug)	700277
Replacement PEEK Probe Seal (seals probe to hollow plug)	700339
Hollow Plug Bore-Seal Nut, 316 S/S (seals hollow plug when probe is not installed)	700311

A DIVISION OF BAC CORROSION CONTROL
RCSL (A TRADING DIVISION OF BAC CORROSION CONTROL LTD)
STAFFORD PARK 11, TELFORD, SHROPSHIRE, TF3 3AY
T : +44 (0) 1952 290321 E : sales@rcslgroup.com W: www.rcslgroup.com
MEMBER OF MIDROC EUROPE

Model LP7000 Ordering Product Code Generation								
HL	Linear Polarisation Probe For The Two Inch Access Fitting System							
	Mounting Material							
	2	316						
	3	C276						
		Connector Type						
		1	Small Connector					
		2	Standard Connector					
			LP Electrode Options					
			0	Two-electrode integral type				
				Seal Type				
				0	Glass			
				1	Epoxy			
					Length (calculated length rounded down to ⅛ inch increment)			
					XXXX	Length in inches, in 2 decimal place format (e.g. 6.25 inches = 0625)		
						Options		
						000	None	
							Probe Seal Options	
							01	PTFE
							02	PEEK
HL	**2**	**2**	**0**	**0**	**0625**	**000**	**01**	**Example of Probe Ordering Product Code**

Note: For alloys, sizes, or other special requirements not listed, please contact our sales department.

LPR Electrodes

LPR probe electrodes are replaceable and are sold separately.

The LP7000 probe requires Electrode Product Code: EL400XXX2800000.

Please see RCSL's product data sheet for LPR electrodes for ordering information.

RCSL (A TRADING DIVISION OF BAC CORROSION CONTROL LTD)
STAFFORD PARK 11, TELFORD, SHROPSHIRE, TF3 3AY
T : +44 (0) 1952 290321 E : sales@rcslgroup.com W: www.rcslgroup.com

4.14
Model LP7100
Retrievable Three Electrode Linear Polarisation Resistance Probe
For The High Pressure Two Inch Access Fitting System

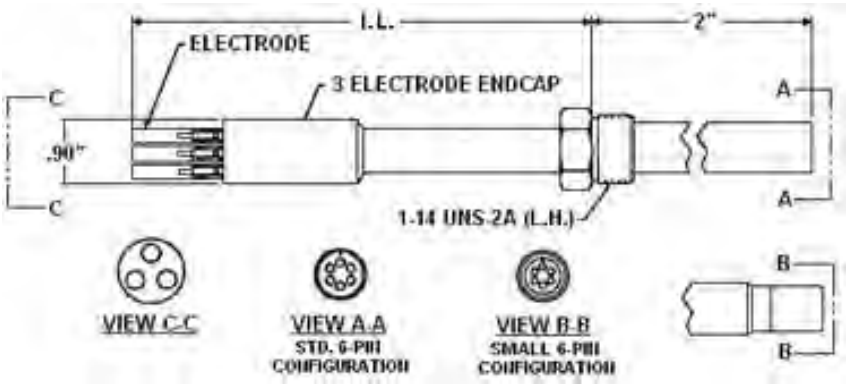

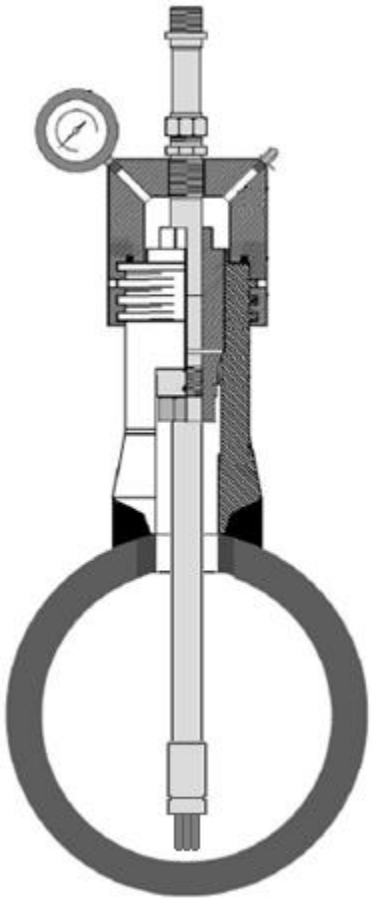

Picture is for illustrative purposes only, other access fitting mounting options are available

The Model LP7100 is a fixed-length, linear polarisation resistance probe for use with the two inch access fitting system at high pressure and high temperature.

The probe assembly consists of an insertion rod with a hermetically sealed three-electrode endcap with threaded mounting studs (5-40 and 4-40 UNC threads are available), a hermetically sealed six pin connector and a pipe plug with the industry standard 1-14 UNS 2A LH thread.

The pipe plug on the probe screws into the hollow plug nut of the access system. This allows the probe to be installed in the process, using a retriever tool and service valve, without process shutdown.

Several standard electrodes are available to meet your specific needs. Probe adaptors are also available and must be ordered separately.

The insertion length (I.L.) can range from 2 inch up to any length specified by the customer in ⅛ inch increments

Please ensure that the 4-40 UNC thread option and EL525 electrodes are selected when ordering this probe for use with CorrTran instruments.

Specifications	
Probe Body	316 Stainless Steel or C276
Endcap Seal	Glass
Fill Material	Epoxy
Temperature Rating	260°C / 500°F
Pressure Rating	3600psi / 245 Bar
Mounting	Two inch Access Fitting System With Hollow Plug

Linear Polarisation Probe Spare Parts	Product Code
Replacement PTFE Probe Seal (seals probe to hollow plug)	700277
Replacement PEEK Probe Seal (seals probe to hollow plug)	700339
Hollow Plug Bore-Seal Nut, 316 S/S (seals hollow plug when probe is not installed)	700311

A DIVISION OF BAC CORROSION CONTROL
RCSL (A TRADING DIVISION OF BAC CORROSION CONTROL LTD)
STAFFORD PARK 11, TELFORD, SHROPSHIRE, TF3 3AY
T : +44 (0) 1952 290321 E : sales@rcslgroup.com W: www.rcslgroup.com
MEMBER OF MIDROC EUROPE

Model LP7100 Ordering Product Code Generation								
HL	Linear Polarisation Probe For The Two Inch Access Fitting System							
	Mounting Material							
	2	316						
	3	C276						
		Connector Type						
		1	Small Connector					
		2	Standard Connector					
			LP Electrode Options					
			1	3x integral 5-40 UNC Threaded Mounting Studs (standard)				
			H	3x integral 4-40 UNC Threaded Mounting Studs (CorrTran)				
				Seal Type				
				0	Glass			
					Length (calculated length rounded down to ⅛ inch increment)			
					XXXX	Length in inches, in 2 decimal place format (e.g. 6.25 inches = 0625)		
						Options		
						000	None	
							Probe Seal Options	
							01	PTFE
							02	PEEK
HL	**2**	**2**	**1**	**0**	**612**	**000**	**01**	**Example of Probe Ordering Product Code**

Note: For alloys, sizes, or other special requirements not listed, please contact our sales department.

LPR Electrodes

LPR probe electrodes are replaceable and are sold separately.

The LP7100 probe with 5-40 UNC thread requires Electrode Product Code: EL412XXX2800000. Note that these electrodes vary in length by material, this should be considered when calculating the probe length.

When using the LP7100 probe with CorrTran instrument, please ensure that the probe is ordered with 4-40 UNC threaded mounting studs. Electrode Product Code: EL525XXX28000XX is required.

Please see RCSL's product data sheet for LPR electrodes for ordering information.

RCSL (A TRADING DIVISION OF BAC CORROSION CONTROL LTD)
STAFFORD PARK 11, TELFORD, SHROPSHIRE, TF3 3AY
T : +44 (0) 1952 290321 E : sales@rcslgroup.com W: www.rcslgroup.com

4.15
Model LP7210
Retrievable Three Flush Electrode Linear Polarisation Resistance Probe
For The High Pressure Two Inch Access Fitting System

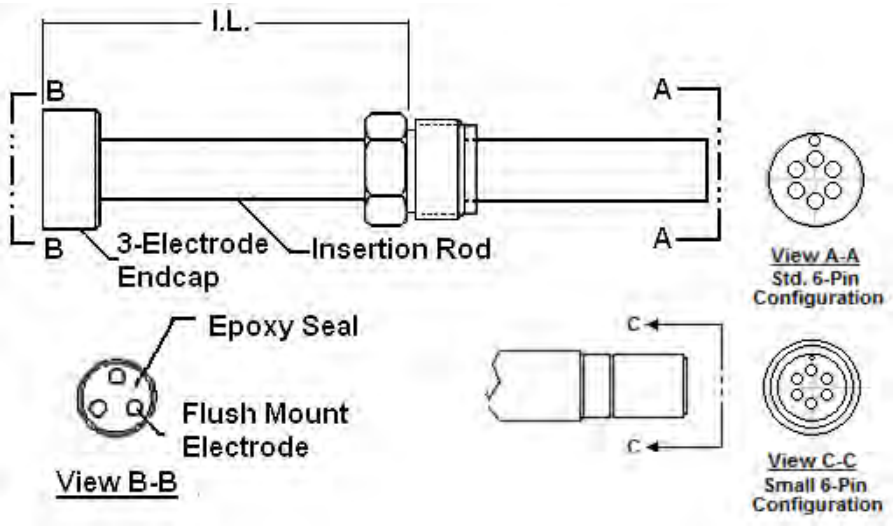

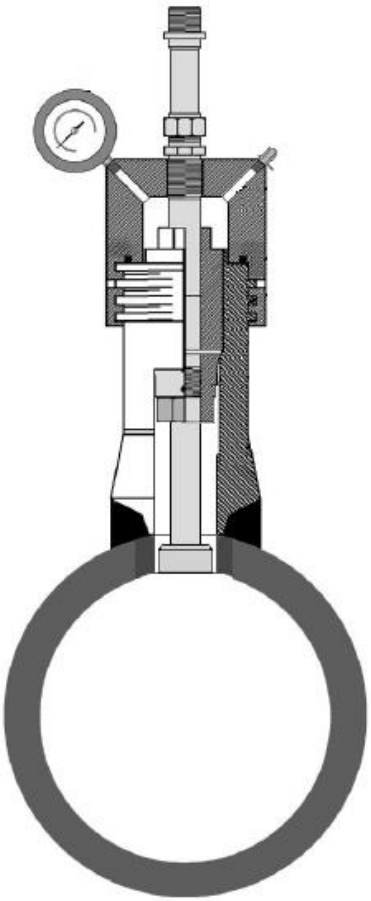

Picture is for illustrative purposes only, other access fitting mounting options are available.

The Model LP7210 is a fixed-length, flush-mount, three electrode, retrievable, linear polarisation resistance probe for use with the two inch access fitting system at high pressure and high temperature.

These probes are ideally suited for applications where the probe electrodes need to be flush with the wall of the pipe.

The probe assembly consists of an insertion rod, a flush mount, three-electrode endcap, a hermetically sealed six pin connector and a pipe plug with the industry standard 1-14 UNS 2A LH thread.

The pipe plug on the probe screws into the hollow plug nut of the access system. This allows the probe to be installed in the process, using a retriever tool and service valve, without process shutdown.

The probe's three-electrode endcap is filled with an epoxy seal.

The Electrodes are not replaceable. The insertion length (I.L.) can range from a minimum of 1.75 inches up to any length specified by the customer in ⅛ inch increments.

Specifications	
Probe Body	316 Stainless Steel or C276
Endcap Seal	Epoxy
Fill Material	Epoxy
Temperature Rating	260°C / 500°F
Pressure Rating	3600psi / 245 Bar
Mounting	Two inch Access Fitting System With Hollow Plug

Linear Polarisation Probe Spare Parts	Product Code
Replacement PTFE Probe Seal (seals probe to hollow plug)	700277
Replacement PEEK Probe Seal (seals probe to hollow plug)	700339
Hollow Plug Bore-Seal Nut, 316 S/S (seals hollow plug when probe is not installed)	700311

A DIVISION OF BAC CORROSION CONTROL
RCSL (A TRADING DIVISION OF BAC CORROSION CONTROL LTD)
STAFFORD PARK 11, TELFORD, SHROPSHIRE, TF3 3AY
T : +44 (0) 1952 290321 E : sales@rcslgroup.com W: www.rcslgroup.com
MEMBER OF MIDROC EUROPE

Model LP7210 Ordering Product Code Generation								
HL	Linear Polarisation Probe For The Two Inch Access Fitting System							
	Mounting Material							
	2	316						
	3	C276						
		Connector Type						
		2	Standard Connector					
			LP Electrode Options					
			4	Three-electrode integral flush type				
			6	Three-electrode integral flush adjustable type				
				Seal Type				
				1	Epoxy			
					Length (calculated length rounded down to ⅛ inch increment)			
					XXXX	Length in inches, in 2 decimal place format (e.g. 6.25 inches = 0625)		
						Electrode Alloy		
						XXX	Use Code in Alloy Chart	
							Probe Seal Options	
							01	PTFE
							02	PEEK
HL	**2**	**2**	**4**	**1**	**612**	**XXX**	**01**	**Example of Probe Ordering Product Code**

Note: For alloys, sizes, or other special requirements not listed, please contact our sales department.

Electrode Alloy Chart		
Code	**Description**	**UNS#**
377	C1018 Carbon Steel	G10180
159	316L S.S.	S31603
419	CDA110	C11000
434	CDA443	C44300

A DIVISION OF BAC CORROSION CONTROL
RCSL (A TRADING DIVISION OF BAC CORROSION CONTROL LTD)
STAFFORD PARK 11, TELFORD, SHROPSHIRE, TF3 3AY
T : +44 (0) 1952 290321 E : sales@rcslgroup.com W: www.rcslgroup.com
MEMBER OF MIDROC EUROPE

4.16
Model EL400, EL412 & EL525
Electrodes For Linear Polarisation Resistance Probes

The electrodes in Linear Polarisation Resistance (LPR) probes are consumable components. Most LPR probes have replaceable electrodes for this reason.

This data sheet covers the electrodes for standard 2 electrode, 3 electrode and “CorrTran” type LPR probes. Other types of electrode are available, please contact our sales department with your requirement.

The minimum Order Quantity for Electrodes is 10pcs. This may increase for non-standard materials.

LPR Electrodes are available in almost any alloy to suit your application. For alloys, sizes, or other special requirements not listed, please contact our sales department.

Replacement Electrodes for 2 Electrode LPR Probes

Model EL400 Ordering Product Code Generation				
EL	Electrode For Linear Polarisation Probe			
	Electrode Type			
	400	4-40 UNC 2B Thread		
		Electrode Alloy		
		XXX	Use Code in Alloy Chart	
			Electrode Finish	
			2800000	Centre-Less Ground Finish
EL	**400**	**375**	**2800000**	**Example of Electrode Ordering Product Code**

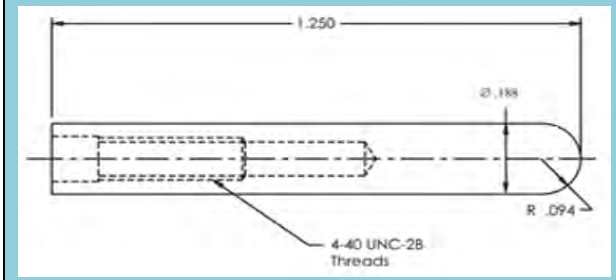

Electrode Alloy Chart		
Code	**Description**	**UNS#**
C1010*	Carbon Steel – UNS G10100	375
304L	Stainless Steel – UNS S30403	145
316L	Stainless Steel – UNS S31603	159
CDA110	Copper – UNS C1100	419
CDA443	Brass – UNS C44300	434
Al 1100	Aluminium – UNS A91100	290
C276	Nickel Alloy – UNS N10276	A12
A625	Nickel Alloy – UNS N06625	602
Lead	UNS L5005	653

*Chemically equivalent to standard pipe-grade carbon steels.

A DIVISION OF BAC CORROSION CONTROL
RCSL (A TRADING DIVISION OF BAC CORROSION CONTROL LTD)
STAFFORD PARK 11, TELFORD, SHROPSHIRE, TF3 3AY
T : +44 (0) 1952 290321 E : sales@rcslgroup.com W: www.rcslgroup.com
MEMBER OF MIDROC EUROPE

Replacement Electrodes for 3 Electrode LPR Probe

Model EL412 Ordering Product Code Generation				
EL	Electrode For Linear Polarisation Probe			
	Electrode Type			
	412	5-40 UNC 2B Thread		
		Electrode Alloy		
		XXX	Use Code in Alloy Chart	
			Electrode Finish	
			2800000	Centre-Less Ground Finish
EL	**412**	**377**	**2800000**	**Example of Electrode Ordering Product Code**

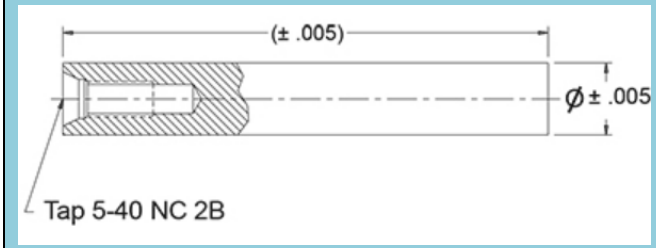

Electrode Alloy Chart		
Code	**Description**	**UNS#**
C1018	Carbon Steel - UNS G10180	377
304L	Stainless Steel – UNS S30403	145
316L	Stainless Steel – UNS S31603	159
CDA110	Copper – UNS C1100	419
CDA443	Brass – UNS C44300	434
Al 1100	Aluminium – UNS A91100	290
C276	Nickel Alloy – UNS N10276	A12
A625	Nickel Alloy – UNS N06625	602
Lead	UNS L5005	653

The EL412 Electrode Length and diameter varies by alloy. Examples below:

Material	Length
C1018 CS	1.72"
316L S/S	1.62"
CDA110	3.5"
CDA443	3.17"

A DIVISION OF BAC CORROSION CONTROL
RCSL (A TRADING DIVISION OF BAC CORROSION CONTROL LTD)
STAFFORD PARK 11, TELFORD, SHROPSHIRE, TF3 3AY
T : +44 (0) 1952 290321 E : sales@rcslgroup.com W: www.rcslgroup.com
MEMBER OF MIDROC EUROPE

Replacement Electrodes for 3 Electrode "CorrTran" Style LPR Probe

Model EL525 Ordering Product Code Generation					
EL	Electrode For Linear Polarisation Probe				
	Electrode Type				
	525	4-40 UNC 2B Thread, for CorrTran LPR Probe			
		Electrode Alloy			
		XXX	Use Code in Alloy Chart		
			Electrode Finish		
			28000	Centre-Less Ground Finish	
				Electrode Insulator	
				00	Viton (Standard)
				10	Teflon
				60	Kalrez 4079
				70	Kalrez 6375
EL	**525**	**375**	**28000**		**Example of Electrode Ordering Product Code**

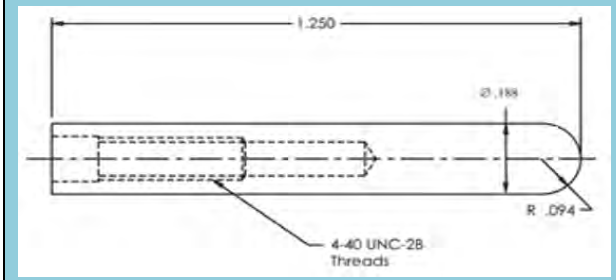

Electrode Alloy Chart		
Code	**Description**	**UNS#**
C1010*	Carbon Steel – UNS G10100	375
304L	Stainless Steel – UNS S30403	145
316L	Stainless Steel – UNS S31603	159
CDA110	Copper – UNS C1100	419
CDA443	Brass – UNS C44300	434
Al 1100	Aluminium – UNS A91100	290
C276	Nickel Alloy – UNS N10276	A12
A625	Nickel Alloy – UNS N06625	602
Lead	UNS L5005	653

*Chemically equivalent to standard pipe-grade carbon steels.

RCSL (A TRADING DIVISION OF BAC CORROSION CONTROL LTD)
STAFFORD PARK 11, TELFORD, SHROPSHIRE, TF3 3AY
T : +44 (0) 1952 290321 E : sales@rcslgroup.com W: www.rcslgroup.com

5.0
Instrumentation

Sub-Section No.

Instruments & Accessories For Use With Electrical Resistance Probes

Instruments For Use With Linear Polarisation Resistance Probes

Accessories

5.1
Model MS0500
Corrosion Meter For Electrical Resistance Probes

The MS0500 is a battery-powered, portable corrosion meter capable of interpreting all electrical resistance type corrosion probes. Combining a light weight of only 4 pounds with ease of operation, the MS0500 enables the operator to take readings from several different probe locations.

Corrosion rate measurements are made using the electrical resistance method. Essentially, the instrument measures the resistance of the probe element which changes over time as metal loss occurs. The rate of change is directly proportional to the corrosion rate. This method finds a wide variety of applications since it can be used in conductive and nonconductive environments, such as petroleum, chemical, water, soil, or even atmosphere.

Probe shown in photograph not included with corrosion meter

The MS0500 has a permanently attached cable assembly which mates directly to any standard ER probe. A switch is provided on the front panel of the instrument for selecting the probe type to be measured (wire loop, tube loop, cylindrical, etc.). Readings are taken using the dial and analog meter on the front panel.

The MS0500 also offers a built-in battery test function, and comes in a convenient carrying case.

Model MS0500 Technical Specifications	
MS0500 – ER Corrosion Meter (Ordering # IN0500)	
Physical Data	
Instrument Weight:	1.08 kg (2.38 lb)
Total Weight w/ Carrying Case & Accessories:	1.63 kg (3.6 lb)
Instrument Dimensions:	7.62cm H x 12.7cm W x 17.15cm D (3" H x 5" W x 6.75")
Carrying Case Dimensions:	15.24cm H x 15.24cm W x 22.23cm D (6.0" x 6.0" x 8.75")
Operating Temperature:	0° to 50°C (32° to 122°F)
Storage Temperature:	0° to 50°C (32° to 122°F)
Performance Data	
Measurement Type:	ER measurement using any standard ER probe type (wire loop, tube loop, cylindrical, flush, strip, etc.) w/ check reading.
Range:	0-1000 digits representing 0-100% of probe life
Resolution:	1 digit
Electrical Data	
Power Requirements:	Two 9V Batteries
Maximum Probe Cable Distance:	30.48m (100ft). This may vary with element type

Special Features
- Simple user interface
- Built-in battery check
- Portable

Accessory Items
Carrying Case, 6" Probe Cable (attached), Meter Prover, Operation Manual

A DIVISION OF BAC CORROSION CONTROL
RCSL (A TRADING DIVISION OF BAC CORROSION CONTROL LTD)
STAFFORD PARK 11, TELFORD, SHROPSHIRE, TF3 3AY
T : +44 (0) 1952 290321 E : sales@rcslgroup.com W: www.rcslgroup.com
MEMBER OF MIDROC EUROPE

5.2
Models MS2600E & MS2601E
High Resolution Transmitter For Electrical Resistance Probes
4-20mA Analog Output

The Model MS2600E & MS2601E ER Transmitters measure all types of electrical resistance (ER) corrosion probes.

The new high-resolution, 16-bit measurement provides faster response, obtaining corrosion rates in hours instead of days. The transmitter can be remote or direct-mounted (shown below).

The MS2600E transmitter is available in a weather-proof stainless steel enclosure designed for applications which do not permit aluminium enclosures (such as offshore environments or Zone 0 hazardous areas).

Alternatively the MS2601E has a weather-proof (NEMA-4X) and explosion proof cast aluminum enclosure.

The MS2600E & MS2601E are completely loop-powered, so installation is simple.

A two-wire connection is all that is required for both instrument power and data transmission. Setup is also simple, using a set of switches to select the probe type to be measured.

MS2600E direct mounted to a retrievable probe

MS2600E

MS2601E

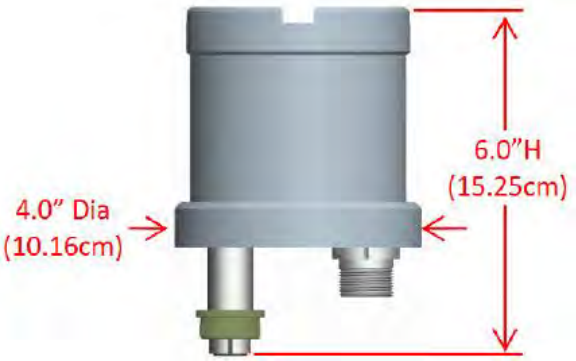

A DIVISION OF BAC CORROSION CONTROL
RCSL (A TRADING DIVISION OF BAC CORROSION CONTROL LTD)
STAFFORD PARK 11, TELFORD, SHROPSHIRE, TF3 3AY
T : +44 (0) 1952 290321 E : sales@rcslgroup.com W: www.rcslgroup.com
MEMBER OF MIDROC EUROPE

Models MS2600E & MS2601E Technical Specifications	
MS2600E & MS2601E – High Resolution ER, Transmitter, 4-20mA	
Mounting Specifications:	Direct probe mount (standard) May be pole mounted using optional hardware (Up to a 6.35cm (2.5”) Diameter pole)
Physical Data MS2600E	
Instrument Weight:	1.68Kg (3.7 lb.)
Total Weight w/ Accessories:	2.61Kg (5.76lb.)
Instrument Dimensions	15.25cm Height x 10.16cm Diameter (6.0” Height x 4” Diameter)
Enclosure:	316 Stainless Steel, IP66
Physical Data MS2601E	
Instrument Weight:	1.68Kg (3.7 lb.)
Total Weight w/ Accessories:	2.61Kg (5.76lb.)
Instrument Dimensions:	20.32cm H x 12.24cm W x 8.76cm D (8.0" Height x 4.82" W x 3.45" D)
Enclosure:	Copper Free Cast Aluminium Explosion Proof (FM, CSA, CENELEC, UL) IP 66, NEMA 4X, 7BCD, 9EFG
Performance Data	
Measurement Type:	ER measurement using any standard ER probe type (Wire Loop, Tube Loop, Cylindrical, Flush, Strip, etc.)
Operating Temperature:	-20°C to 70°C (-4°F 158°F)
Storage Temperature:	-40°C to 80°C (-40°F to 176°F)
Range:	0-100% of probe life
Resolution:	0.0015% of probe life
Cycle Time:	1 Minute
Electrical Data	
Power Requirements:	10 to 28 VDC
Maximum Probe Cable Distance:	30ft (9.1m)
Output Specifications:	4-20mA Current Loop Output
Hazardous Location Certifications – Intrinsic Safety	
USA/ Canada	Conforms to ANSI/UL Std. 60079-0, 60079-11, 61010-1 CAN/CSA Std. E66079-0, E60079-11 & CAN/CSA C22.2 No. 61010-1 Class I, Zone0, AEx ia IIC T4 Ga Zone 20, AEx ia IIIC T130° C Da -20° C ≤ Ta ≤ +70° C
Europe and Worldwide (ATEX and IECEx) X. Probe dielectric rating <500V r.m.s. Do not exceed	II 1 G Ex ia IIC T4 Ga II 1 D Ex ia III T130°C Da - 20°C ≤ Ta ≤ + 70°C ATEX Certificate No: ITS14ATEX27981X IECEx Certificate No: IECEx ITS 14.0010X
Included Accessories	
Meter Prover, Operations Manual	
MS2600E also has 10 metre Current Loop Harness	
Optional Accessories	
Probe Extension Cable, Remote Mounting Hardware	
M20x1.5 cable entry adaptor (for MS2601E only, for output signal cable only)	

A DIVISION OF BAC CORROSION CONTROL
RCSL (A TRADING DIVISION OF BAC CORROSION CONTROL LTD)
STAFFORD PARK 11, TELFORD, SHROPSHIRE, TF3 3AY
T : +44 (0) 1952 290321 E : sales@rcslgroup.com W: www.rcslgroup.com
MEMBER OF MIDROC EUROPE

5.3
Models MS2700E & MS2701E
High Resolution Transmitter For Electrical Resistance Probes
RS485 Modbus Output

The Model MS2700E and MS2701E ER Transmitters measure all types of electrical resistance (ER) corrosion probes.

The new high-resolution, 16-bit measurement provides faster response, obtaining corrosion rates in hours instead of days. The transmitter can be remote or direct-mounted (shown).

The MS2700E transmitter is available in a weather-proof (IP66) stainless steel enclosure designed for applications which do not permit aluminum enclosures (such as offshore environments or Zone 0 hazardous areas).

Alternatively the MS2701E has a weather-proof (IP66) and explosion proof cast aluminum enclosure.

The MS2700E & MS2701E transmitters offer simple installation and robust RS-485 Modbus communication, allowing up to 32 units to be connected in series (daisy-chained) on a single line. Setup is also simple, using a set of switches to select the probe type to be measured, address, and other options.

MS2700E shown direct mounted to a retrievable probe

MS2700E

MS2701E

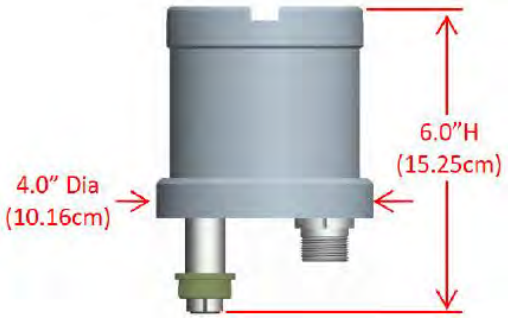

A DIVISION OF BAC CORROSION CONTROL
RCSL (A TRADING DIVISION OF BAC CORROSION CONTROL LTD)
STAFFORD PARK 11, TELFORD, SHROPSHIRE, TF3 3AY
T : +44 (0) 1952 290321 E : sales@rcslgroup.com W: www.rcslgroup.com
MEMBER OF MIDROC EUROPE

Models MS2700E & MS2701E Technical Specifications	
MS2700E & MS2701E – High Resolution ER Transmitter, Direct Mount, RS-485 Modbus	
Mounting Specifications:	Direct probe mount (standard) May be pole mounted using optional hardware (Up to a 6.35cm (2.5”) Diameter pole)
Physical Data MS2700E	
Instrument Weight:	1.68Kg (3.7 lb.)
Total Weight w/ Accessories:	2.61Kg (5.76lb.)
Instrument Dimensions	15.25cm Height x Ø10.16cm (6.0” Height x Ø4”)
Enclosure:	316 Stainless Steel, IP66
Physical Data MS2701E	
Instrument Weight:	1.68Kg (3.7 lb.)
Total Weight w/ Accessories:	2.61Kg (5.76lb.)
Instrument Dimensions:	20.32cm H x 12.24cm W x 8.76cm D (8.0" Height x 4.82" W x 3.45" D)
Enclosure:	Copper Free Cast Aluminium Explosion Proof (FM, CSA, CENELEC, UL) IP 66, NEMA 4X, 7BCD, 9EFG
Performance Data	
Measurement Type:	ER measurement using any standard ER probe type (Wire Loop, Tube Loop, Cylindrical, Flush, Strip, etc.)
Operating Temperature:	-20°C to 70°C (-4°F 158°F)
Storage Temperature:	-40°C to 80°C (-40°F to 176°F)
Range:	0-100% of probe life
Resolution:	0.0015% of probe life (16 bit)
Cycle Time:	75 seconds
Electrical Data	
Power Requirements:	10 to 28 VDC
Maximum Probe Cable Distance:	9.1m (30ft)
Output Specifications:	RS-485 Modbus, RTU or ASCII Protocol (Switch Selectable) 2400 / 4800 / 9600 / 19.2K Selectable Baud 32 Maximum Units (Addresses 1 to 32)
Hazardous Location Certifications – Intrinsic Safety	
USA/ Canada	Conforms to ANSI/UL Std. 60079-0, 60079-11, 61010-1 CAN/CSA Std. E66079-0, E60079-11 & CAN/CSA C22.2 No. 61010-1 Class I, Zone0, AEx ia IIC T4 Ga Zone 20, AEx ia IIIC T130° C Da -20° C ≤ Ta ≤ +70° C
Europe and Worldwide (ATEX and IECEx) X. Probe dielectric rating <500V r.m.s. Do not exceed	II 1 G Ex ia IIC T4 Ga II 1 D Ex ia IIIC T130°C Da - 20°C ≤ Ta ≤ + 70°C ATEX Certificate No: ITS14ATEX28092X IECEx Certificate No: IECEx ITS 14.0052X
Included Accessories	
Meter Prover, Operation Manual. MS2700E also has 10M (33ft) Wiring Harness	
Optional Accessories	
Probe Extension Cable, Remote Mounting Hardware	
MS2701E has option of M20x1.5 cable entry adaptor (for output signal cable only)	

A DIVISION OF BAC CORROSION CONTROL
RCSL (A TRADING DIVISION OF BAC CORROSION CONTROL LTD)
STAFFORD PARK 11, TELFORD, SHROPSHIRE, TF3 3AY
T : +44 (0) 1952 290321 E : sales@rcslgroup.com W: www.rcslgroup.com
MEMBER OF MIDROC EUROPE

5.4
Models MS2800E & MS2801E
Corr Velox Ultra High Resolution Transmitter
For Electrical Resistance Probes
RS485 Modbus Output

The Model MS2800E and MS2801E Corr Velox ER Transmitters measure all types of electrical resistance (ER) corrosion probes.

The ultra high-resolution, 20-bit measurement provides faster response, obtaining corrosion rates in hours instead of days. The transmitter can be remote or direct-mounted (shown).

The MS2800E transmitter is available in a weather-proof (IP66) stainless steel enclosure designed for applications which do not permit aluminum enclosures (such as offshore environments or Zone 0 hazardous areas).

Alternatively the MS2801E has a weather-proof (IP66) and explosion proof cast aluminum enclosure.

The MS2800E & MS2801E transmitters offer simple installation and robust RS-485 Modbus communication, allowing up to 32 units to be connected in series (daisy-chained) on a single line. Setup is also simple, using a set of switches to select the probe type to be measured, address, and other options.

MS2800E shown direct mounted to a retrievable probe

MS2800E

MS2801E

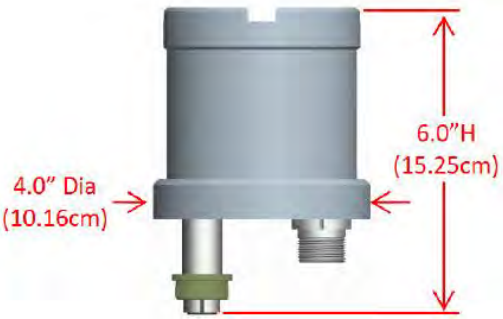

A DIVISION OF BAC CORROSION CONTROL
RCSL (A TRADING DIVISION OF BAC CORROSION CONTROL LTD)
STAFFORD PARK 11, TELFORD, SHROPSHIRE, TF3 3AY
T : +44 (0) 1952 290321 E : sales@rcslgroup.com W: www.rcslgroup.com
MEMBER OF MIDROC EUROPE

Models MS2800E & MS2801E Technical Specifications	
MS2800E & MS2801E – Ultra High Resolution ER Transmitter, Direct Mount, RS-485 Modbus	
Mounting Specifications:	Direct probe mount (standard) May be pole mounted using optional hardware (Up to a 6.35cm (2.5”) Diameter pole)
Physical Data MS2800E	
Instrument Weight:	1.68kg (3.7 lb.)
Total Weight w/ Accessories:	2.61kg (5.76lb.)
Instrument Dimensions:	15.25cm Height x Ø10.16cm (6.0” Height x Ø4”)
Enclosure:	316 Stainless Steel, IP66
Physical Data MS2801E	
Instrument Weight:	1.68kg (3.7 lb.)
Total Weight w/ Accessories:	2.61kg (5.76lb.)
Instrument Dimensions:	20.32cm H x 12.24cm W x 8.76cm D (8.0" Height x 4.82" W x 3.45" D)
Enclosure:	Copper Free Cast Aluminium Explosion Proof (FM, CSA, CENELEC, UL) IP 66, NEMA 4X, 7BCD, 9EFG
Performance Data	
Measurement Type:	ER measurement using any standard ER probe type (Wire Loop, Tube Loop, Cylindrical, Flush, Strip, etc.)
Operating Temperature:	-20°C to 70°C (-4°F 158°F)
Storage Temperature:	-40°C to 80°C (-40°F to 176°F)
Range:	0-100% of probe life
Resolution:	0.0001% of probe life (20 bit)
Cycle Time:	90 seconds
Electrical Data	
Power Requirements:	10 to 28 VDC
Maximum Probe Cable Distance:	9.1m (30ft)
Output Specifications:	RS-485 Modbus, RTU or ASCII Protocol (Switch Selectable) 2400 / 4800 / 9600 / 19.2K Selectable Baud 32 Maximum Units (Addresses 1 to 32)
Hazardous Location Certifications – Intrinsic Safety	
USA/ Canada	Conforms to ANSI/UL Std. 60079-0, 60079-11, 61010-1 CAN/CSA Std. E66079-0, E60079-11 & CAN/CSA C22.2 No. 61010-1 Class I, Zone0, AEx ia IIC T4 Ga Zone 20, AEx ia IIIC T130° C Da -20° C ≤ Ta ≤ +70° C
Europe and Worldwide (ATEX and IECEx) X. Probe dielectric rating <500V r.m.s. Do not exceed	II 2(1) G Ex db [ia Ga] IIC T6…T4 Gb II 2(1) D Ex tb [ia Da] IIIC T80°C Db - 40°C ≤ Ta ≤ + 70°C ATEX Certificate No: ITS18ATEX2203437X IECEx Certificate No: IECEx ETL 18.0020X
Included Accessories	
Meter Prover, Operation Manual. MS2800E also has 10M (33ft) Wiring Harness	
Optional Accessories	
Probe Extension Cable, Remote Mounting Hardware	
MS2801E has option of M20x1.5 cable entry adaptor (for output signal cable only)	

A DIVISION OF BAC CORROSION CONTROL
RCSL (A TRADING DIVISION OF BAC CORROSION CONTROL LTD)
STAFFORD PARK 11, TELFORD, SHROPSHIRE, TF3 3AY
T : +44 (0) 1952 290321 E : sales@rcslgroup.com W: www.rcslgroup.com
MEMBER OF MIDROC EUROPE

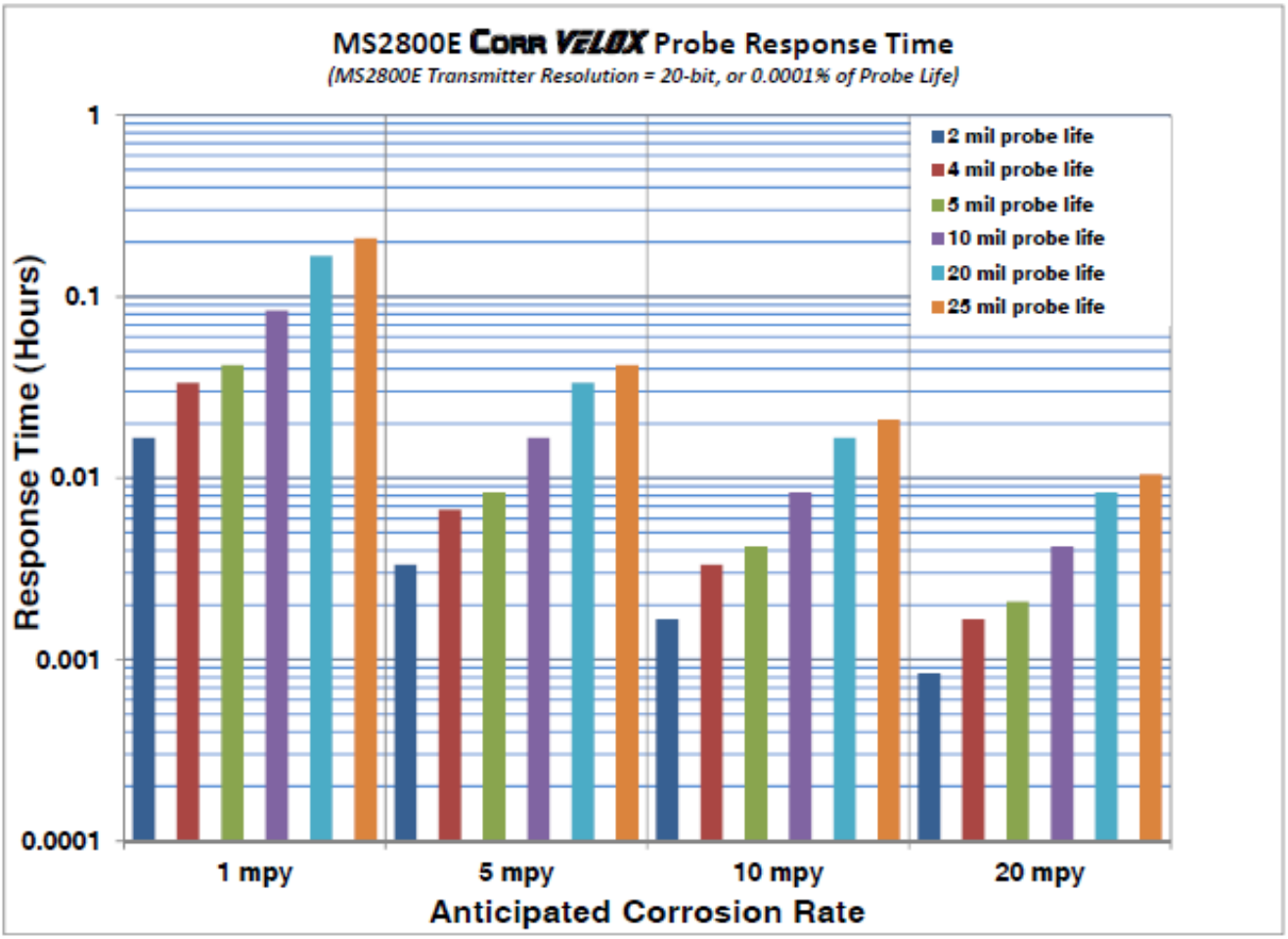

A DIVISION OF BAC CORROSION CONTROL
RCSL (A TRADING DIVISION OF BAC CORROSION CONTROL LTD)
STAFFORD PARK 11, TELFORD, SHROPSHIRE, TF3 3AY
T : +44 (0) 1952 290321 E : sales@rcslgroup.com W: www.rcslgroup.com
MEMBER OF MIDROC EUROPE

5.5
Models MS3500E, MS3510E & MS3520E
Remote Data-Loggers
For Electrical Resistance Probes

The Model MS3500E, MS3510E and MS3520E are battery-powered, intrinsically safe, remote data-loggers capable of measuring and storing data from all types of electrical resistance (ER) corrosion probes.

The instrument is microprocessor-based and features a simple, menu-driven interface.

Corrosion rate measurements are made using a high-resolution electrical resistance method, measuring up to 65535 probe units. Essentially, the instrument measures the resistance of the probe element which changes over time, as metal loss occurs. The rate of change is directly proportional to corrosion rate.

This method finds a wide variety of applications since it can be used in conductive and nonconductive environments such as petroleum, chemical, water, soil, or even atmosphere.

The instrument takes probe readings on a user-programmable logging interval. Readings are time and date stamped as they are taken, then stored to memory.

Between readings, the instrument remains in a “sleep” mode to conserve main battery power. The instrument’s memory is capable of storing more than 100,000 readings, and is stored in non-volatile Flash memory.

Stored data can be uploaded to any PC as a comma-delimited ASCII text file. Because the data is in ASCII text format, it can be imported into any standard data analysis program such as Microsoft Excel. Data can also be reviewed on the instrument’s LCD display for quick reference.

Stored data can be downloaded directly to a certified USB storage device or via Bluetooth (option on Model MS3520E). This eliminates the need to remove the instrument from its site, or to bring a laptop PC to the site. This can be particularly useful when collecting data from multiple MS3500E, MS3510E and / or MS3520E Data Loggers. And since the instrument is intrinsically safe, data can be downloaded from the instrument even in hazardous locations.

The MS3510E also offers an optional 4-20mA current loop output. This feature allows data from the instrument to be fed directly to any industrial process computer that accepts analogue inputs.

The instrument is housed in a stainless steel NEMA 4X / IP 66 enclosure, and all external connections are weather-proof. This makes the instrument suitable for use in almost any indoor or outdoor environment.

A DIVISION OF BAC CORROSION CONTROL
RCSL (A TRADING DIVISION OF BAC CORROSION CONTROL LTD)
STAFFORD PARK 11, TELFORD, SHROPSHIRE, TF3 3AY
T : +44 (0) 1952 290321 E : sales@rcslgroup.com W: www.rcslgroup.com
MEMBER OF MIDROC EUROPE

Model MS3500E Technical Specifications	
MS3500E – Remote ER Data Logger	
MS3510E – Remote ER Data Logger with 4-20mA Current Loop Output	
MS3520E – Remote ER Data Logger with Blue Tooth	
All models feature USB interface for data download	
Physical Data	
Instrument Weight:	5.42 Kg (11.94 lb.)
Total Weight w/ Accessories:	6.19 Kg (13.64 lb.)
Instrument Dimensions:	29.21cm H x 22.71cm W x 10.16cm D (11.50” x 8.94 “ x 4”)* *Dimensions do not include Bluetooth aerial on MS3520E
Case Specifications:	NEMA-4X / IP66 Stainless Steel
Mounting Specifications:	27.31cm H x 15.24cm W (10.75” x 6”) Bolt Pattern 0.76cm (0.3”) Diameter Bolt Holes
Operating Temperature:	-40° to +70°C (-40° to +158°F)
Storage Temperature:	-40° to +70°C (-40° to +158°F)
Performance Data:	
Measurement Type:	ER measurement using any standard ER probe type (wire loop, tube loop, cylindrical, flush, strip, etc.)
Range:	0-65535 Probe Life Units (Displayed as 0.00 to 1000.00)
Resolution:	0.0015% of probe life
Download Method:	Directly to certified USB storage device Via Bluetooth (MS3520E)
Data Storage:	> 100,000 readings
Electrical Data:	
Power Requirements:	7.2 V lithium battery pack
Typical Battery Life:	3 years at 1 hour measurement interval
Output MS3500E:	Download to USB flash drive
Output MS3510E:	USB & 4-20mA Current Loop Output
Output MS3520E	USB & Bluetooth Class v2.0 / 10 meter range
Output Specifications:	RS-232 Output in Comma-Delimited ASCII Text Format
Hazardous Location Certifications:	
Intrinsic Safety Ex ia[ia] IIC T4 Ga:	-40 Deg C < Ta < 70 Deg C (with Tadrian TL5930 cells) -40 Deg C < Ta < 50 Deg C (with Xeno XL-205F cells)
Special Features:	
• Microprocessor-based electronics • Large internal memory for more storage • Data battery backup • Menu-driven interface • Low-battery detection • IP66 enclosure	
Included Accessory Items (All Models):	
10ft Probe Cable, Meter Prover, Operation Manual, Corrosion Data Management Software.	
Included Accessory Items (MS3510E):	
Communications Cable and Connector	
Optional Accessories:	
Product Code: ET1650 - Certified USB Flash Drive	
Bluetooth transfer unit	

A DIVISION OF BAC CORROSION CONTROL
RCSL (A TRADING DIVISION OF BAC CORROSION CONTROL LTD)
STAFFORD PARK 11, TELFORD, SHROPSHIRE, TF3 3AY
T : +44 (0) 1952 290321 E : sales@rcslgroup.com W: www.rcslgroup.com
MEMBER OF MIDROC EUROPE

5.6
Models MS3600E, MS3610E & MS3620E
Field-Mounted High-Resolution Data Loggers
For Electrical Resistance Probes

The Model MS3600E, MS3610E and MS3620E are battery-powered, intrinsically safe, field-mounted data loggers capable of automatically measuring and storing data from all types of electrical resistance (ER) corrosion probes.

The instrument is microprocessor-based and features an intuitive menu-driven interface. Additionally, the instrument is designed to mount directly to the ER probe which simplifies installation.

Corrosion rate measurements are made using a high-resolution electrical resistance method, measuring up to 65535 probe units.

Essentially, the instrument measures the resistance of the probe element which changes over time, as metal loss occurs. The rate of change is directly proportional to corrosion rate.

This method finds a wide variety of applications since it can be used in conductive and nonconductive environments such as petroleum, chemical, water, soil, or even atmosphere.

The instrument takes probe readings on a user-programmable logging interval. Readings are time and date stamped as they are taken, then stored to memory. Between readings, the instrument remains in a “sleep” mode to conserve main battery power. The instrument’s memory is capable of storing more than 100,000 readings, and is stored in non-volatile Flash memory.

Stored data can be uploaded to any PC as a comma-delimited ASCII text file. Because the data is in ASCII text format, it can be imported into any standard data analysis program such as Microsoft Excel. Data can also be reviewed on the instrument’s LCD display for quick reference.

Stored data can be downloaded directly to a certified USB storage device or via Bluetooth (option on Model MS3620E). This eliminates the need to remove the instrument from its site, or to bring a laptop PC to the site. This can be particularly useful when collecting data from multiple MS3600E/MS3620E Data Loggers. And since the instrument is intrinsically safe, data can be downloaded from the instrument even in hazardous locations.

The MS3610E also offers an optional 4-20mA current loop output. This feature allows data from the instrument to be fed directly to any industrial process computer that accepts analog inputs.

The instrument is housed in a stainless steel NEMA 4X / IP 66 enclosure, and all external connections are weather-proof. This makes the instrument suitable for use in almost any indoor or outdoor environment.

A DIVISION OF BAC CORROSION CONTROL
RCSL (A TRADING DIVISION OF BAC CORROSION CONTROL LTD)
STAFFORD PARK 11, TELFORD, SHROPSHIRE, TF3 3AY
T : +44 (0) 1952 290321 E : sales@rcslgroup.com W: www.rcslgroup.com
MEMBER OF MIDROC EUROPE

Model MS3600E, MS3610E & MS3620E Technical Specifications	
MS3600E – Remote ER Data Logger	
MS3610E – Remote ER Data Logger with 4-20mA Current Loop Output	
MS3620E – Remote ER Data Logger with Blue Tooth	
All models feature USB interface for data download	
Physical Data	
Instrument Weight:	2.61 Kg (5.75 lb.)
Total Weight w/ Accessories:	3.52 Kg (7.75 lb.)
Instrument Dimensions:	13.97cm H x 14.1cm W x 19.33cm D (5.50"H x 5.55"W x 7.61"D)* *Dimensions do not include the Bluetooth aerial on MS3620E
Case Specifications:	NEMA-4X / IP66 Stainless Steel
Mounting Specifications:	Direct-to-probe mount
Operating Temperature:	-40° to +70°C (-40° to +158°F)
Storage Temperature:	-40° to +70°C (-40° to +158°F)
Performance Data:	
Measurement Type:	ER measurement using any standard ER probe type (wire loop, tube loop, cylindrical, flush, strip, etc.)
Range:	0-65535 Probe Life Units (Displayed as 0.00 to 1000.00)
Resolution:	0.0015% of probe life
Download Method:	Directly to certified USB storage device Via Bluetooth (MS3620E)
Data Storage:	> 100,000 readings
Electrical Data:	
Power Requirements:	7.2 V lithium battery pack
Typical Battery Life:	3 years at 1 hour measurement interval
Output MS3600E:	Download to USB flash drive
Output MS3610E:	USB & 4-20mA Current Loop Output
Output MS3620E	USB & Bluetooth Class v2.0 / 10 meter range
Output Specifications:	RS-232 Output in Comma-Delimited ASCII Text Format
Hazardous Location Certifications:	
Intrinsic Safety Ex ia[ia] IIC T4 Ga:	-40 Deg C < Ta < 70 Deg C (with Tadrian TL5930 cells) -40 Deg C < Ta < 50 Deg C (with Xeno XL-205F cells)
Special Features:	
• Microprocessor-based electronics • Large internal memory for more storage • Menu-driven interface • Low-battery detection • IP66 enclosure	
Included Accessory Items (All Models):	
Meter Prover, Operation Manual, Corrosion Data Management Software.	
Included Accessory Items (MS3610E):	
Current Loop Connector	
Optional Accessories:	
Product Code: ET1650 - Certified USB Flash Drive	
Bluetooth transfer unit	

A DIVISION OF BAC CORROSION CONTROL
RCSL (A TRADING DIVISION OF BAC CORROSION CONTROL LTD)
STAFFORD PARK 11, TELFORD, SHROPSHIRE, TF3 3AY
T : +44 (0) 1952 290321 E : sales@rcslgroup.com W: www.rcslgroup.com
MEMBER OF MIDROC EUROPE

5.7
Models MS4500E & MS4500E-HC
Portable High Resolution Data-Loggers
For Electrical Resistance Probes

The Model MS4500E and MS4500E-HC are hand-held, battery powered, corrosion meters capable of measuring and storing data from all types of electrical resistance (ER) corrosion probes.

The instrument is light weight, microprocessor-based and features a simple, menu-driven interface using a keypad and a backlit graphical LCD display.

Corrosion rate measurements are made using the electrical resistance method.

Probe shown in photo not included with corrosion meter

Essentially, the instrument measures the resistance of the probe element which changes over time, as metal loss occurs. The rate of change is directly proportional to corrosion rate. This method finds a wide variety of applications since it can be used in conductive and nonconductive environments such as petroleum, chemical, water, soil, or even atmosphere.

The new high-resolution measurement of the instrument detects smaller increments of metal loss, providing faster response than traditional ER instruments.

After taking a reading, the instrument displays metal loss in mils and corrosion rate in mils per year (mpy). The reading can then be stored to memory or discarded. All stored readings are automatically time and date stamped. Readings are stored to non-volatile Flash memory which retains data without the need for a battery backup.

The instrument can store 16,000 readings per probe on up to 250 different probes (4 million total). Stored data can be downloaded down-loaded to a USB Flash ("jump") drive in safe area or to a certified USB flash drive if downloading in a hazardous area. Data can be downloaded directly to a PC via certified USB cable with barrier.

Data can be opened and charted using the provided CDMS software, or can be imported into any standard data analysis (spread-sheet) program such as Microsoft Excel. Data can also be reviewed and charted on the instrument's LCD display for quick reference.

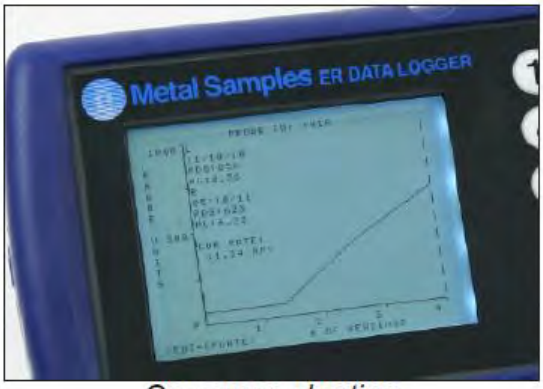

On-screen charting

Transfer data directly to USB Flash drive

Pictures are for illustrative purposes only

The MS4500E-HC has a high capacity battery, for increased battery life.

A DIVISION OF BAC CORROSION CONTROL
RCSL (A TRADING DIVISION OF BAC CORROSION CONTROL LTD)
STAFFORD PARK 11, TELFORD, SHROPSHIRE, TF3 3AY
T : +44 (0) 1952 290321 E : sales@rcslgroup.com W: www.rcslgroup.com
MEMBER OF MIDROC EUROPE

Models MS4500E & MS4500E-HC Portable High Resolution Data-Loggers For Electrical Resistance Probes

Model MS4500E & MS4500E-HC Technical Specifications		
MS4500E - High Resolution ER Data-Logger, Portable		
MS4500E-HC - High Resolution ER Data-Logger, Portable, With High Capacity Battery		
Physical Data	**MS4500E**	**MS4500E-HC**
Instrument Weight:	0.78kg (1.71lb.)	1.00kg (2.21lb)
Total Weight With Case & Accessories:	3.16 kg (6.96 lb.)	3.38kg (7.46lb)
Instrument Dimensions:	21.77cm x 11.53cm x 5.59cm (8.75"L x 4.54"W x 2.20"D)	
Carry Case Dimensions:	36.83cm x 28.89cm x 14.92cm (14.50"L x 11.38"W x 5.88"D)	
Performance Data	**MS4500E**	**MS4500E-HC**
Measurement Type:	ER measurement using any standard ER probe type (Wire Loop, Tube Loop, Cylindrical, Flush, Strip, etc.)	
Operating Temperature:	-20°C to 60°C (-4°F 140°F)	-20° to 70°C (-4° to 158°F)
Storage Temperature:	-20°C to 70°C (-4°F to 158°F)	-40° to 70°C (-40° to 158°F)
Range:	0-25,000 probe life units (displayed as 0.00 to 1000.00 PLU's in 0.04 increments)	
Resolution:	0.004% of Probe Life	
Repeatability:	+/- 0.1% of Full Scale	
Electrical Data	**MS4500E**	**MS4500E-HC**
Power Requirements MS4500E:	Four AA Batteries - Duracell PC1500 (or Duracell MN1500)	Two 'C' size 3.6V Lithium Batteries (Xeno Energy XL-145F or Tadiran TL4920)
Maximum Probe Cable Distance:	61m (200ft)	
Download Method:	Directly to USB Flash drive To PC using certified barrier	
Hazardous Location Certifications	**MS4500E**	**MS4500E-HC**
Intrinsic Safety USA/ Canada	For use in Class I Zone 0 AEx ia [ia] IIC T4 Ga Ex ia [ia] IIC T4 Ga Class I, Division 1, Groups A,B,C & D, T4 Provides outputs to Class I, Division 1 [Ex ia] -25°C ≤ Ta ≤ +60°C	-40°C ≤ Ta ≤ +70°C
Intrinsic Safety Europe and Worldwide (ATEX and IECEx)	II 1 G Ex ia [ia] IIC T4 Ga -25°C ≤ Ta ≤ +60°C ATEX Certificate No: **ITS18ATEX203161X** IECEx Certificate No: **IECEx ETL 18.0007X**	-40°C ≤ Ta ≤ +70°C

Special Features

- High resolution ER measurement for rapid response
- Data storage capacity of 16,000 readings per probe on 250 different probes (4 million total)
- Backlit graphical LCD display (320 x 240 pixel resolution)
- On-screen charting
- Automatic data-logging
- Non-volatile Flash memory
- Multilingual menu (English, Spanish, Portuguese, French)
- Portable

Included Accessories

Carrying Case, Probe Cable (1' coiled - 6' extended), Meter Prover, Operation Manual, Corrosion Data Management Software, Protective Boot

Optional Accessories

Product Code: ET1650 - Certified USB Flash Drive
Product Code: ET1867 - Certified USB Barrier

A DIVISION OF BAC CORROSION CONTROL
RCSL (A TRADING DIVISION OF BAC CORROSION CONTROL LTD)
STAFFORD PARK 11, TELFORD, SHROPSHIRE, TF3 3AY
T : +44 (0) 1952 290321 E : sales@rcslgroup.com W: www.rcslgroup.com
MEMBER OF MIDROC EUROPE

5.8
ET1650 – Certified USB Flash Drive

The ET1650 Certified USB flash drive is a data transfer unit (DTU) which is certified for use in hazardous locations when used in conjunction with MS35XX, MS36XX, MS4500E, MS4500E-HC, and MS50XX data-loggers.

The certified DTU allows the user to collect data from the listed data loggers without having to remove the product from the classified area.

The DTU incorporates non-volatile flash memory and has sufficient memory to store millions of readings.

It can be connected to any standard PC using the industry standard USB Type-A connector. The certified DTU must be connected and used in accordance with the control drawing for the appropriate instrument.

Specifications:

Storage Capacity: 8 GB

Operating Temperature: -40° C to 70° C

Storage Temperature: -40° C to 85° C

Humidity: 10-90% RH, non-condensing

Housing: ABS Polycarbonate

USB Class: 1.1 or 2.0

USB Type: Type A

Operating System: Windows 7, Windows 8, Windows 10

Protection Class: II 1 (1) G Ex ia[ia]IIC T4 Ga

Certificate: ITS18ATEX203161X
IECEx ETL 18.0007X

Connection Parameters	
$U_{o\ max}$	≤ 6.0
$I_{o\ max}$	≤ 747.5mA
$P_{o\ max}$	≤ 923.1mW
C_o	12.71µF
L_o	0.37µH

A DIVISION OF BAC CORROSION CONTROL
RCSL (A TRADING DIVISION OF BAC CORROSION CONTROL LTD)
STAFFORD PARK 11, TELFORD, SHROPSHIRE, TF3 3AY
T : +44 (0) 1952 290321 E : sales@rcslgroup.com W: www.rcslgroup.com
MEMBER OF MIDROC EUROPE

5.9
ET1867 – Certified USB Barrier

The ET1867 is a certified USB barrier which allows portable, certified instruments models MS4500E and MS4500E-HC to be connected directly to a PC via the USB port.

The barrier protects the certified instrument from potential damage caused by excessive energy that could enter through the PC's USB port.

This barrier is required to connect the MS4500E or MS4500E-HC directly to a PC. The USB barrier connects to the instruments using a standard USB mini-B connector and connects to a PC using a standard USB-A to USB-B (printer) cable.

The certified USB barrier must be connected and used in accordance with the control drawing for the MS4500E or MS4500E-HC instrument..

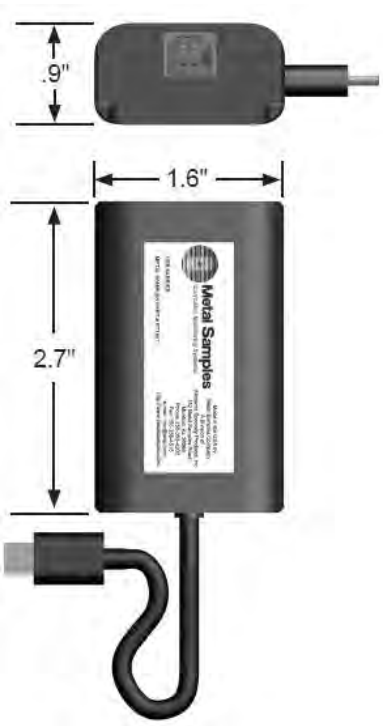

Specifications:

Operating Temperature: -40° C to 70° C

Storage Temperature: -40° C to 85° C

Humidity: 10-90% RH, non-condensing

Housing: ABS Polycarbonate

USB Class: 1.1 or 2.0

USB Type: Type B (To PC Interface) USB Mini-B (To Instrument)

Protection Class: II 1 (1) G Ex ia[ia]IIC T4 Ga

Certified to use with Metal Samples MS4500E and MS4500E-HC Instruments at Non-Hazardous locations

Certificate: ITS18ATEX203161X
IECEx ETL 18.0007X

Connection Parameters	
$U_{o\ max}$	≤ 6.0

A DIVISION OF BAC CORROSION CONTROL
RCSL (A TRADING DIVISION OF BAC CORROSION CONTROL LTD)
STAFFORD PARK 11, TELFORD, SHROPSHIRE, TF3 3AY
T : +44 (0) 1952 290321 E : sales@rcslgroup.com W: www.rcslgroup.com
MEMBER OF MIDROC EUROPE

5.10
Model MS1000
Portable Corrosion Meter
For Linear Polarisation Resistance Probes

The MS1000 is a hand-held, battery-powered corrosion meter. This versatile instrument measures the instantaneous corrosion rate and electrochemical current between the electrodes of any standard 2-electrode linear polarization resistance (LPR) probe.

Corrosion rate measurements are made using the linear polarization resistance technique. The instrument measures the current required to polarize the electrodes of a probe to a known potential. From the polarization potential and the measured current, polarization resistance can be calculated.

Then, using Faraday's law, instantaneous corrosion rate is calculated from polarization resistance.

The MS1000 is designed to calculate the corrosion rate in mils per year (mpy) for carbon steel. Multiplication factors for several common alloys have been included on the front panel of the instrument for quick reference. Multiplication factors for other alloys can be easily calculated using the formulas supplied in the operation manual.

Probe shown in photo is not included with corrosion meter

The MS1000 also offers a high precision zero resistance ammeter (ZRA) for measuring the electrochemical current between electrodes. This function may be used to measure the galvanic current between electrodes of dissimilar alloys.

The MS1000 has a simple function key interface, using a 4-key keypad and a 4-line LCD display. The instrument also offers low-battery detection and an auto-shutoff feature to conserve battery life.

A DIVISION OF BAC CORROSION CONTROL
RCSL (A TRADING DIVISION OF BAC CORROSION CONTROL LTD)
STAFFORD PARK 11, TELFORD, SHROPSHIRE, TF3 3AY
T : +44 (0) 1952 290321 E : sales@rcslgroup.com W: www.rcslgroup.com
MEMBER OF MIDROC EUROPE

Model MS1000 Technical Specifications	
MS1000 – LPR Corrosion Meter	
Physical Data	
Instrument Weight:	0.38Kg (0.84 lb.)
Total Weight w/ Carrying Case and Accessories:	2.36Kg (5.20 lb.)
Instrument Dimensions:	19.38cm (H) x 10.54cm (W) x 3.30cm (D) (7.63” x 4.15” x 1.3”)
Carrying Case Dimensions:	25.40cm (H) x 29.85cm (W) x 13.72cm (D) 10” x 11.75” x 5.4”
Operating Temperature:	0° to 50°C (32° to 122°F)
Storage Temperature:	-20° to 70°C (-4° to 158°F)
Performance Data	
Measurement Type:	2-Electrode LPR Galvanic
Range:	2-Electrode: 0-40 mpy Galvanic 0-80 µA
Resolution:	2-Electrode: 0.02 mpy Galvanic 0.04 µA
Cycle Time:	Corrosion Rate: 60 sec ZRA: 30 sec
Electrical Data	
Power Requirements:	One 9V Li-Ion Rechargeable Battery (see below)
Maximum Probe Cable Distance:	609.6m (2000 ft)
Special Features	
• Microprocessor-based electronics • Function key interfacing using 4-key keypad and 4-line LCD display • Low-battery detection • Portable	
Accessory Items	
Carrying Case, 10ft Probe Cable, Battery Charger, Lightweight Protective Case, Meter Prover, Operation Manual	
Li-Ion Rechargeable Battery & Charger	
Li-Ion Battery Features • 9V • 400mAH capacity Li-Ion Charger Features: • Multi-voltage input for domestic & international use (100-240 VAC 50/60Hz) • Automatic cut-off when battery is charged (to prevent over-charging) • Red / Green LED’s to indicate when battery is charging / full	

A DIVISION OF BAC CORROSION CONTROL
RCSL (A TRADING DIVISION OF BAC CORROSION CONTROL LTD)
STAFFORD PARK 11, TELFORD, SHROPSHIRE, TF3 3AY
T : +44 (0) 1952 290321 E : sales@rcslgroup.com W: www.rcslgroup.com
MEMBER OF MIDROC EUROPE

5.11
Model MS1500L
Portable Corrosion Meter
For Linear Polarisation Resistance Probes

The Model MS1500L is a hand-held, battery-powered, intrinsically safe corrosion meter capable of measuring and storing data from all types of 2- or 3-electrode linear polarization resistance (LPR) corrosion probes.

The instrument is light weight, microprocessor-based, and features a simple, menu-driven interface using a 12-key keypad and a 4-line LCD display.

Corrosion rate measurements are made using the linear polarization resistance technique. The instrument measures the current required to polarize the electrodes of a probe to a known potential.

From the polarization potential and the measured current, polarization resistance can be calculated.

Then, using Faraday's law, the instantaneous corrosion rate can be calculated from polarization resistance.

Probe shown in photo not included with corrosion meter

The MS1500L incorporates a high-precision zero-resistance ammeter (ZRA) for measuring galvanic current between electrodes. It also offers a high-precision voltmeter for measuring the open-circuit potential between electrodes.

After performing a measurement, the instrument displays the corrosion rate, current, or potential, depending on the mode selected. The reading can then be stored to memory or discarded.

All stored readings are automatically time and date stamped, and are protected by a lithium back-up battery. The instrument can store a maximum of 3,000 readings on up to 100 different probes.

Stored data can be uploaded to a PC as a comma-delimited ASCII text file. Because the data is in ASCII text format, it can be imported into any standard data analysis program such as Microsoft Excel. Data can also be reviewed on the instrument's LCD display for quick reference.

The MS1500L may also be used as a data transfer unit (DTU) for the MS3500L Remote Data Logger. Data may be transferred from multiple MS3500L field-based units to the MS1500L, then later transferred to a PC for analysis.

A DIVISION OF BAC CORROSION CONTROL
RCSL (A TRADING DIVISION OF BAC CORROSION CONTROL LTD)
STAFFORD PARK 11, TELFORD, SHROPSHIRE, TF3 3AY
T : +44 (0) 1952 290321 E : sales@rcslgroup.com W: www.rcslgroup.com
MEMBER OF MIDROC EUROPE

Model MS1500L Technical Specifications		
MS1500L – Handheld ER Corrosion Data Logger (Ordering #IN1500)		
Physical Data		
Instrument Weight:	0.64 kg (1.4 lb)	
Total Weight w/ Carrying Case & Accessories:	2.39 kg (5.26 lb)	
Instrument Dimensions:	19.38cm H x 10.54cm W x 5.08cm D (7.63” x 4.15” x 2”)	
Carrying Case Dimensions:	25.40cm H x 29.85cm W x 13.72cm D (10” x 11.75” 5.4”)	
Operating Temperature:	0° to 50°C (32° to 122°F)	
Storage Temperature:	-20° to 70°C (-4° to 158°F)	
Performance Data		
Measurement Type	**Range**	**Resolution**
2-Electrode	0 to 200 mpy	0.01 mpy
3-Electrode	0-150 mpy	0.01 mpy
Galvanic	± 999µA	1 µA
Potential	± 999mV	1mV
Electrical Data		
Power Requirements	One 9V Battery	
Maximum Probe Cable Distance:	1.83m (6ft)	
Output Specifications:	RS-232 Output in Comma-Delimited ASCII Text Format	
Intrinsic Safety:	ETL LISTED 9900750	Class I, Division 1 Groups A, B, C and D Temperature Code T2D Class I, Zone 0 Group IIC, T2D Conforms to ANSI/UL Std. 913
Special Features:		
- Microprocessor-based electronics		
- Data storage capacity of 3,000 readings on 100 different probes, with battery backup		
- Menu-driven interface using a 12-key keypad and a 4-line LCD display		
- Low-battery detection		
- Portable		
Accessory Items		
Carrying Case, 6” Probe Cable (attached), Meter Prover, 6 to 5-pin Adapter, Galvanic Adapter, Communications Cable and Connector, Operation Manual, Corrosion Data Management Software.		

A DIVISION OF BAC CORROSION CONTROL
RCSL (A TRADING DIVISION OF BAC CORROSION CONTROL LTD)
STAFFORD PARK 11, TELFORD, SHROPSHIRE, TF3 3AY
T : +44 (0) 1952 290321 E : sales@rcslgroup.com W: www.rcslgroup.com
MEMBER OF MIDROC EUROPE

5.12
Model MS2001L
Remote Continous Corrosion Meter
For Linear Polarisation Resistance Probes

The MS2001L is a microprocessor-based, field-mountable corrosion rate meter.

This versatile instrument measures the instantaneous corrosion rate and electrochemical current between the electrodes of any standard 2-electrode linear polarization resistance (LPR) probe.

Corrosion rate is displayed on the LCD display.

Corrosion rate measurements are made using the linear polarization resistance technique.

The instrument measures the current required to polarize the electrodes of a probe to a known potential.

From the polarization potential and the measured current, polarization resistance can be calculated. Then, using Faraday's law, instantaneous corrosion rate is calculated from polarization resistance.

Alloy multipliers for mild steel, copper, brass, and lead are incorporated into the instrument. The multiplier is selected using a switch on the front panel of the instrument.

The MS2001L also offers a high precision zero resistance ammeter (ZRA) for measuring the electrochemical current between electrodes. This function may be used to measure the galvanic current between electrodes of dissimilar alloys.

The instrument is housed in a NEMA-4X enclosure, making the MS2001L suitable for use in almost any indoor or outdoor environment.

A DIVISION OF BAC CORROSION CONTROL
RCSL (A TRADING DIVISION OF BAC CORROSION CONTROL LTD)
STAFFORD PARK 11, TELFORD, SHROPSHIRE, TF3 3AY
T : +44 (0) 1952 290321 E : sales@rcslgroup.com W: www.rcslgroup.com
MEMBER OF MIDROC EUROPE

Model MS2001L
Remote Continous Corrosion Meter
For Linear Polarisation Resistance Probes

Model MS2100L Technical Specifications	
MS2001L - Continuous LPR Corrosion Meter (Ordering # IN2001L)	
Physical Data:	
Instrument Weight:	0.78 kg (1.72 lb.)
Total Weight w/ Accessories:	1.33 kg (2.93 lb.)
Instrument Dimensions:	15cm H x 15cm W x 9.1cm D (5.91”H x 5.91”W x 3.57”D)
Case Specifications:	NEMA-4X / IP66
Mounting Specifications:	12cm x 16.7cm (4.72”H x 6.55”W) Bolt Pattern 0.48cm (0.188”) Diameter Bolt Holes
Operating Temperature:	0° to 50°C (32° to 122°F)
Storage Temperature:	-20° to 70°C (-4° to 158°F)
Performance Data:	
Measurement Type:	2-Electrode LPR, Galvanic
Range:	2-Electrode: 0-40 mpy Galvanic: +/- 0-80 µA
Resolution:	2-Electrode: 0.02 mpy Galvanic: 0.04 µA
Cycle Time:	90 seconds
Electrical Data:	
Power Requirements:	100-240 VAC, 50/60 Hz
Maximum Probe Cable Distance:	609.6m (2000ft)
Special Features:	
• Alloy selector switch (Mild Steel, Copper, Brass, and Lead) • 4-line, backlit LCD display • Universal power supply input • Continuous corrosion rate display (numeric value and 20-segment bar graph)	
Included Accessory Items:	
10ft Probe Cable, Meter Prover, Operation Manual	

A DIVISION OF BAC CORROSION CONTROL
RCSL (A TRADING DIVISION OF BAC CORROSION CONTROL LTD)
STAFFORD PARK 11, TELFORD, SHROPSHIRE, TF3 3AY
T : +44 (0) 1952 290321 E : sales@rcslgroup.com W: www.rcslgroup.com
MEMBER OF MIDROC EUROPE

5.13
Models MS2100L & MS2150L - CorrTran AQUA 4-20mA/HART® Transmitters For Linear Polarisation Resistance Probes

Models MS2100L and MS2150L CorrTran AQUA are compact corrosion transmitters used in the water treatment industry that measure general corrosion, localised corrosion (pitting), and conductance, and transmits that information to operators via 4 to 20mA / HART® protocol in real time. The corrosion rate or pitting factor is configured as the primary variable using a standard 2-wire 4 to 20 mA output. The remaining outputs are configured as secondary and tertiary HART variables.

Probe shown in photo not included with transmitter

The CorrTran AQUA utilises state-of-the-art algorithms and data analysis techniques to accurately measure general corrosion rate and pitting. Harmonic distortion analysis (HDA) is applied to improve the performance of the industry-accepted linear polarisation resistance (LPR) technique used to measure corrosion rate.

To further enhance the performance, an application specific Stern-Geary variable (B value) is calculated and updated every measuring cycle. There is no need to manually update the B value because of process changes.

During the measurement cycle, the CorrTran AQUA also performs an automated electrochemical noise (ECN) measurement, which in combination with the corrosion rate data can provide a measurement of localised corrosion (pitting).

The CorrTran AQUA works with Metal Samples three electrode CorrTran style probes and electrodes. Probes are available in a variety of mounting types and materials to suit almost any type of installation.

Features

- On-line corrosion monitoring, multivariable
- Install in an existing coupon rack
- 2-wire, 4 to 20 mA transmitter, HART interface
- General corrosion, localized corrosion (pitting), and conductance monitoring via HART
- Stern-Geary B value automatically updated for changes in the process
- Optional local LCD (MS2150L)
- Optional cable gland entry

Model MS2100L & MS2150L Ordering Product Code Generation			
MS21	CorrTran Aqua Transmitter		
	Display		
	0	No Display	
	5	With Display	
		Cable Entry	
		0L	4 Pin Cable Connector (External)
		1L	Cable Gland Entry (Internal 3-Pin Electrical Connector)
MS21	0	0L	Example of Transmitter Ordering Product Code

A DIVISION OF BAC CORROSION CONTROL
RCSL (A TRADING DIVISION OF BAC CORROSION CONTROL LTD)
STAFFORD PARK 11, TELFORD, SHROPSHIRE, TF3 3AY
T : +44 (0) 1952 290321 E : sales@rcslgroup.com W: www.rcslgroup.com
MEMBER OF MIDROC EUROPE

5.13
Models MS2100L & MS2150L - CorrTran AQUA 4-20mA/HART® Transmitters For Linear Polarisation Resistance Probes

Model	MS2100L CorrTran AQUA LPR 4-20mA/HART Transmitter
Physical Data	
Instrument Weight	1.1 lb (500 g)
Instrument Dimensions	7.1" x 5.4" x 2.4" (180mm x 137mm x 61mm) without LCD display 7.1" x 5.4" x 3.4" (180mm x 137mm x 86mm) with LCD display
Operating Temperature	-40 to 158°F (-40 to 70°C) without LCD display 14 to 122°F (-10 to 50°C) with LCD display
Enclosure Material	ABS
Degree of Protection	IP66, NEMA 4X
Electrical Data	
Electrical Connection	2-wire 4-20 mA with HART
Supply Voltage	11-30 VDC without LCD display 15-30 VDC with LCD display
Current Consumption	4 to 22.5 mA
Maximum Load (at 24 V DC)	575 Ω with high alarm / 650 Ω without high alarm (without display) / 850 Ω without high alarm (with display)

Terminal Assignments

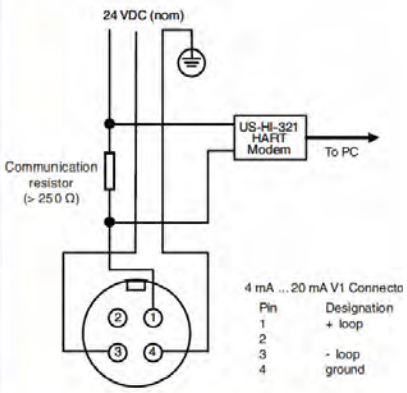

2-wire connection with HART (DC)

Measurement Data			
Probe Type	3-Electrode LPR		
Measurement Type	**General Corrosion[1]**	**Localized Corrosion**	**Conductance**
Measurement Unit	mpy (mils per year) or mmpy (mm per year)	Unitless	microSiemens (µS)
Measurement Range(s)	Default Range: 0 to 40 mpy (0 to 1 mmpy)	Low Range: 0.0 to 0.01	5 to 333,333
Measurement Range(s)	Maximum[2]: 400 mpy (10 mmpy)	Medium Range: 0.01 to 0.1 High Range: 0.1 to 1.0	
	[1] Instantaneous corrosion rate available as a primary variable. Average corrosion rate available via HART. *[2] Range adjustable via HART or factory set.* *Adjustment for these variables can be achieved through any HART-compatible device using the CorrTran MV DD or with PACTware: configuration software that makes it easy to program equipment via HART.*		
Factory Settings	B value (Stern Geary value): 25.6 mV K value (corrosion constant): 11800 (2e- in reaction)		
Measurement Cycle	4 to 34 minutes (depends on configuration)		
Output Data			
Output Signal	4-20 mA with HART protocol		
Alarm Events	Alarm on over-range		
Alarm Types	Digital and Analog (configurable)		
Analog Alarm Options	Current high (22.5 mA) with auto-reset (default), current high with manual reset, or none		
Load	Minimum load for HART communication: 250 Ω		
Certificates and Approvals			
Patents	U.S. patents: 7,239,156; 7,245,132; 7,265,559; 7,282,928		
Conformity Information			
Degree of Protection	EN 60529		

Accessory	Ordering Code
CorrTran Com Tools	**ET915549**
HART modem, HART to USB interface	**ET915548**
HART Loop Converter. Converts HART signal to 3 separate 4 to 20 mA outputs.	**ET1804**

A DIVISION OF BAC CORROSION CONTROL

RCSL (A TRADING DIVISION OF BAC CORROSION CONTROL LTD)
STAFFORD PARK 11, TELFORD, SHROPSHIRE, TF3 3AY
T : +44 (0) 1952 290321 E : sales@rcslgroup.com W: www.rcslgroup.com

MEMBER OF MIDROC EUROPE

5.14
Model MS2900L - CorrTran MV
4-20mA/HART® Transmitter
For Linear Polarisation Resistance Probes

The Model MS2900L CorrTran MV transmitter measures general corrosion, localised corrosion (pitting), and conductance, and transmits that information to operators via 4 to 20mA / HART® protocol in real time.

The corrosion rate or pitting factor is configured as the primary variable using a standard 2-wire 4 to 20 mA output. The remaining outputs are configured as secondary and tertiary HART variables.

The CorrTran MV utilises state-of-the-art algorithms and data analysis techniques to accurately measure general corrosion rate and pitting.

Harmonic distortion analysis (HDA) is applied to improve the performance of the industry-accepted linear polarisation resistance (LPR) technique used to measure corrosion rate.

To further enhance the performance, an applicationspecific Stern-Geary variable (B value) is calculated and updated every measuring cycle. There is no need to manually update the B value because of process changes.

During the measurement cycle, CorrTran MV also performs an automated electrochemical noise (ECN) measurement, which in combination with the corrosion rate data can provide a measurement of localized corrosion (pitting).

The CorrTran MV works with Metal Samples threeelectrode CorrTran style probes and electrodes. Probes are available in a variety of mounting types and materials to suit almost any type of installation.

Features

- On-line corrosion monitoring, multivariable
- 2-wire, 4 to 20 mA transmitter, HART interface
- General corrosion, localized corrosion (pitting), and conductance monitoring via HART
- Stern-Geary B value automatically updated for changes in the process

Model MS2900L Ordering Product Code Generation			
MS2900L	CorrTran MV Transmitter		
	Mounting Type		
	DM	Direct Mount	
	06	Remote Mount with 6ft (1.8m) Cable	
	12	Remote Mount with 12ft (3.6m) Cable	
	XX	Special (Remote Mount with XX' of Cable)	
		Certification	
		D2	CSA, NI, Class I, Div 2, Group A-D
		Ex	Explosion/Flame Proof
		GP	General Purpose
		IS	CSA, IS, Class I, Div. 1, Group A-D Ⓔx II 1G EEx ia IIC T4
MS2900L	DM	D2	Example of Transmitter Ordering Product Code

A DIVISION OF BAC CORROSION CONTROL
RCSL (A TRADING DIVISION OF BAC CORROSION CONTROL LTD)
STAFFORD PARK 11, TELFORD, SHROPSHIRE, TF3 3AY
T : +44 (0) 1952 290321 E : sales@rcslgroup.com W: www.rcslgroup.com
MEMBER OF MIDROC EUROPE

5.14
Model MS2900L - CorrTran MV
4-20mA/HART® Transmitter
For Linear Polarisation Resistance Probes

Model	MS2900L CorrTran MV LPR 4-20mA/HART Transmitter
Physical Data	
Instrument Weight	1.1 lb (500 g)
Instrument Dimensions	3.78" x 3.15" x 6.30" (96mm x 80mm x 160mm)
Operating Temperature	-40 to 158 °F (-40 to 70 °C)
Enclosure Material	Aluminum
Degree of Protection	IP66, NEMA 4X
Electrical Entry	¾ NPT
Electrical Data	
Electrical Connection	2-wire 4-20 mA with HART
Minimum terminal voltage	11 V at 20 mA without alarm, or at 22.5 mA with alarm
Maximum terminal voltage	30 V
Current Consumption	4 to 22.5 mA
Maximum Load (at 24 V DC)	575 Ω with high alarm, or 650 Ω without high alarm

Terminal Assignments

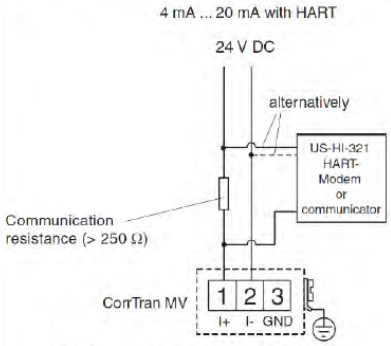

2-wire connection with HART (DC)

Measurement Data			
Probe Type	3-Electrode LPR		
Measurement Type	**General Corrosion[1]**	**Localized Corrosion**	**Conductance**
Measurement Unit	mpy (mils per year) or mmpy (mm per year)	Unitless	microSiemens (µS)
Measurement Range(s)	Default Range: 0 to 40 mpy (0 to 1 mmpy) Maximum[2]: 1000 mpy (25 mmpy) *[1] Instantaneous corrosion rate available as a primary variable. Average corrosion rate available via HART.* *[2] Range adjustable via HART or factory set.*	Default Range: 0.0 to 1.0 Low Range: 0.0 to 0.3 High Range: 0.3 to 1.0	5 to 333,333
Maximum Measured Error	Excitation voltage < 0.05% of full span Corrosion current measurement <0.2% of full span		
Factory Settings	B value (Stern Geary value): 25.6 mV K value (corrosion constant): 11800 (2e- in reaction)		
Measurement Cycle	4 to 21 minutes (depends on configuration)		

Output Data	
Output Signal	4-20 mA with HART protocol
Alarm Events	Alarm on over-range
Alarm Types	Digital and Analog (configurable)
Analog Alarm Options	Current high (22.5 mA) with auto-reset (default), current high with manual reset, or none
Output Damping	0, 1, 2, 5, 10, 20, 50 s
Load	Minimum load for HART communication: 250 Ω
Certificates and Approvals	
Ex Approval	LCIE 05 ATEX 6097X , for additional certificates contact Metal Samples
CSA Approval	cCSAus certified for USA and Canada; Certificate no. 1563164 IS: Cl. I, II, III; Div. 1, 2; Groups A-G EX: Cl. I; Div. 1, 2; Groups A-D NI: Cl. I, II, III; Div. 2; Groups A-G
Type of Protection	Ⓔx II 1G EEx ia IIC T4
Patents	U.S. patents: 7,239,156; 7,245,132; 7,265,559; 7,282,928
Conformity Information	
Directive 94/9/EC (ATEX)	EN 50014, EN 50020, EN 50284
Degree of Protection	EN 60529

EC-Type Examination Certificate, Statement of Conformity, Declaration of Conformity, Attestation of Conformity and instructions have to be observed where applicable. For information contact Metal Samples.

Accessory	Ordering Code
CorrTran Com Tools	**ET915549**
Wall or pipe mounting bracket for remote mounted transmitters	**ET905775**
HART modem, HART to USB interface	**ET915548**

Intrinsic Safety Isolators	Ordering Code
SMART transmitter power supply, 1-channel, IS isolator	**ET231364**
SMART transmitter power supply, 2-channel, IS isolator	**ET229332**
Transmitter supply isolator, 4 to 20 mA, 1-channel, IS limit alarm	**ET255622**
SMART transmitter power supply, compact version, 1-channel, IS isolator	**ET185535**

A DIVISION OF BAC CORROSION CONTROL
RCSL (A TRADING DIVISION OF BAC CORROSION CONTROL LTD)
STAFFORD PARK 11, TELFORD, SHROPSHIRE, TF3 3AY
T : +44 (0) 1952 290321 E : sales@rcslgroup.com W: www.rcslgroup.com
MEMBER OF MIDROC EUROPE

5.15
Models MS3500L & MS3510L
Remote Data-Logger
For Linear Polarisation Resistance Probes

Models MS3500L & MS3510L are battery powered, intrinsically safe, remote data-loggers capable of measuring and storing data from all types of linear polarization resistance (LPR) corrosion probes.

The instrument is microprocessor-based and features a simple, menu-driven interface using a 2-key keypad and a 2-line LCD display.

Corrosion rate measurements are made using the linear polarization resistance technique. The instrument measures the current required to polarize the electrodes of a probe to a known potential.

From the polarization potential and the measured current, polarization resistance can be calculated. Then, using Faraday's law, the instantaneous corrosion rate can be calculated from polarization resistance.

The MS3500L Remote Data Logger is designed to provide a continuous record of corrosion activity in remote locations that are infrequently visited, such as cross country pipelines and unmanned production platforms. However, this unit finds equal application in locations that are inconvenient or difficult to access on a regular basis.

The MS3500L incorporates a high-precision zero-resistance ammeter (ZRA) for measuring galvanic current between electrodes. It also offers a high-precision voltmeter for measuring the open-circuit potential between electrodes.

The MS3500L takes probe readings on a user-programmable logging interval. Readings are time and date stamped as they are taken, then stored to memory. Between readings, the instrument remains in a "sleep" mode to conserve main battery power. The instrument's memory is capable of storing 3,000 readings, and is protected by a lithium back-up battery.

Stored data can be uploaded to a PC as a comma-delimited ASCII text file. Because the data is in ASCII text format, it can be imported into any standard data analysis program such as Microsoft Excel. Data can also be reviewed on the instrument's LCD display for quick reference.

Stored data can also be downloaded to a Metal Samples Model MS1500L Hand Held LPR Data Logger for transfer to a PC. This handy feature eliminates the need to remove the MS3500L from its site, or to bring a laptop PC to the site. This can be particularly useful when collecting data from multiple MS3500L Data Loggers. And since both the MS3500L and the MS1500L are intrinsically safe, data can be uploaded from the MS3500L to the MS1500L even in hazardous locations.

The MS3500L also offers an optional 4-20mA current loop output (model MS3510L). This feature allows data from the instrument to be fed directly to any industrial process computer that accepts analogue inputs.

The instrument is housed in a stainless steel NEMA 4X enclosure, and all external connections are weather-proof. This makes the MS3500L suitable for use in almost any indoor or outdoor environment.

A DIVISION OF BAC CORROSION CONTROL
RCSL (A TRADING DIVISION OF BAC CORROSION CONTROL LTD)
STAFFORD PARK 11, TELFORD, SHROPSHIRE, TF3 3AY
T : +44 (0) 1952 290321 E : sales@rcslgroup.com W: www.rcslgroup.com
MEMBER OF MIDROC EUROPE

Models MS3500L & MS3510L
Remote Data-Logger
For Linear Polarisation Resistance Probes

Model MS3500L Technical Specifications

MS3500L – Remote LPR Data Logger (Ordering # IN3500L)
MS3510L – Remote LPR Data Logger with 4-20mA Current Loop Output (Ordering # IN3510L)

Physical Data:

Instrument Weight:	5.42 Kg (11.94 lb.)
Total Weight w/ Accessories:	6.19 Kg (13.64 lb.)
Instrument Dimensions:	29.21cm H x 22.71cm W x 10.16cm D (11.5” x 8.94” x 4”)
Case Specifications:	NEMA-4X / IP66 Stainless Steel
Mounting Specifications:	27.31cm H x 15.24cm W (10.75” x 6”) Bolt Pattern 0.76 cm (0.3”) Diameter Bolt Holes
Operating Temperature:	0° to 50°C (32° to 122°F)
Storage Temperature:	-20° to 70°C (-4° to 158°F)

Performance Data:

Measurement Type	Range	Resolution	Cycle Time
2-Electrode	0-200 mpy	0.01 mpy	1 minute to 99 hours
3-Electrode	0 to 150 mpy	0.01 mpy	1 minute to 99 hours
Galvanic	± 999 µA	1µA	1 minute to 99 hours
Potential	± 999 µA	1 mV	1 minute to 99 hours

Electrical Data:

Power Requirements:	Six 1.5V AA Batteries
Maximum Probe Cable Distance:	3.05m (10 ft.)
Output Specifications:	RS-232 Output in Comma-Delimited ASCII Text Format
Intrinsic Safety	ETL LISTED 9900750 Class I, Division 1 Groups A, B, C and D Temperature Code T3 Class I, Zone 0 Group IIC, T3C Conforms to ANSI/UL Std. 913

Special Features:

- Microprocessor-based electronics
- Data storage capacity of 3,000 readings, with battery backup
- Menu-driven interface using a 2-key keypad and a 2-line LCD display
- Low-battery detection

Included Accessory Items (All Models):

10ft Probe Cable, Meter Prover, 6 to 5-Pin Adapter, Galvanic Adapter, Communications Cable and Connector, Operation Manual, Corrosion Data Management Software.

Included Accessory Items (MS3510L):

Current Loop Connector

Optional Accessories:

MS1500L portable data-logger and data-transfer device

A DIVISION OF BAC CORROSION CONTROL
RCSL (A TRADING DIVISION OF BAC CORROSION CONTROL LTD)
STAFFORD PARK 11, TELFORD, SHROPSHIRE, TF3 3AY
T : +44 (0) 1952 290321 E : sales@rcslgroup.com W: www.rcslgroup.com
MEMBER OF MIDROC EUROPE

5.16
Model MS6200L
Bench Top Data-Logger
For Linear Polarisation Resistance Probes

The MS6200L is a bench-top data logger capable of measuring and storing data from all types of linear polarization resistance (LPR) corrosion probes.

The instrument is microprocessor-based and features a simple, menu-driven interface using a 2-key keypad and a 2-line LCD display.

It is housed in a rugged but lightweight plastic enclosure and is ideally suited for use in laboratory environments. The adjustable handle can be used for carrying the unit, or can be used as a tilt stand to adjust the viewing angle.

Corrosion rate measurements are made using the linear polarization resistance technique. The instrument measures the current required to polarize the electrodes of a probe to a known potential. From the polarization potential and the measured current, polarization resistance can be calculated. Then, using Faraday's law, the instantaneous corrosion rate can be calculated from polarization resistance.

The MS6200L incorporates a high-precision zero-resistance ammeter (ZRA) for measuring galvanic current between electrodes. It also offers a high-precision voltmeter for measuring the open-circuit potential between electrodes.

The MS6200L takes probe readings on a user-programmable logging interval. Readings are time and date stamped as they are taken, then stored to memory. Between readings, the instrument remains in a "sleep" mode to conserve energy. The instrument's memory is capable of storing 3,000 readings, and is protected by a lithium back-up battery. Stored readings can be downloaded to a computer via USB or serial port for further analysis using the provided software. The software provides a simple and intuitive interface for downloading, viewing, and graphing the data.

A DIVISION OF BAC CORROSION CONTROL
RCSL (A TRADING DIVISION OF BAC CORROSION CONTROL LTD)
STAFFORD PARK 11, TELFORD, SHROPSHIRE, TF3 3AY
T : +44 (0) 1952 290321 E : sales@rcslgroup.com W: www.rcslgroup.com
MEMBER OF MIDROC EUROPE

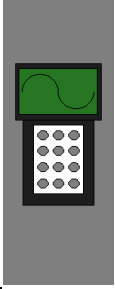

Model MS6200L Technical Specifications			
MS6200L - Bench-Top LPR Data Logger			
Physical Data:			
Instrument Weight:	1.02 Kg (2.25 lb.)		
Total Weight w/ Accessories:	2.02 Kg (4.45 lb.)		
Instrument Dimensions:	6.6cm H x 26cm W x 16.5cm D (2.6" H x 10.3" W x 6.5" D)		
Operating Temperature:	0° to 50°C (32° to 122°F)		
Storage Temperature:	-20° to 70°C (-4° to 158°F)		
Performance Data:			
Measurement Type	**Range**	**Resolution**	**Cycle Time**
2-Electrode	0-200 mpy	0.01 mpy	2 minute to 99 hours
3-Electrode	0 to 150 mpy	0.01 mpy	1 minute to 99 hours
Galvanic	± 999 µA	1µA	1 minute to 99 hours
Potential	± 999 µA	1 mV	1 minute to 99 hours
Electrical Data:			
Power Requirements:	100-240 VAC, 50/60 Hz		
Maximum Probe Cable Distance:	3.05m (10 ft.)		
Output Specifications:	RS-232 Output in Comma-Delimited ASCII Text Format		
Special Features:			
- Microprocessor-based electronics			
- Data storage capacity of 3,000 readings, with battery backup			
- Menu-driven interface using a 2-key keypad and a 2-line LCD display			
Included Accessory Items:			
10’ Probe Cable, Meter Prover, 6 to 5-Pin Adapter, Galvanic Adapter, Communications Cable and Connector, Operation Manual, Corrosion Data Management Software			

A DIVISION OF BAC CORROSION CONTROL
RCSL (A TRADING DIVISION OF BAC CORROSION CONTROL LTD)
STAFFORD PARK 11, TELFORD, SHROPSHIRE, TF3 3AY
T : +44 (0) 1952 290321 E : sales@rcslgroup.com W: www.rcslgroup.com
MEMBER OF MIDROC EUROPE

5.17
Model MS2540
Data Receiver / Repeater

The MS2540 Receiver is designed to be used with ER and LPR current loop transmitters to provide a single-channel corrosion monitoring system.

The MS2540 provides a local display of the probe and transmitter data. Additionally the MS2540 can repeat the information to a plant control room via RS-485 Modbus.

The MS2540 utilizes a color touch screen to display information and present user controls. The unit is powered by 100-240 VAC, and provides the 24 VDC supply for powering the transmitter's 4-20 mA loop.

The receiver processes the 4-20 mA signal to provide a digital readout of the cumulative metal loss and the probe corrosion rate based on the monitoring period set by the user (48 hours, 7 days, 15 days or 30 days).

The MS2540 also offers an integrated web server. This feature allows users to access the MS2540 from any PC on the network using a standard web browser. Through this interface users can view data and make setup changes to the MS2540.

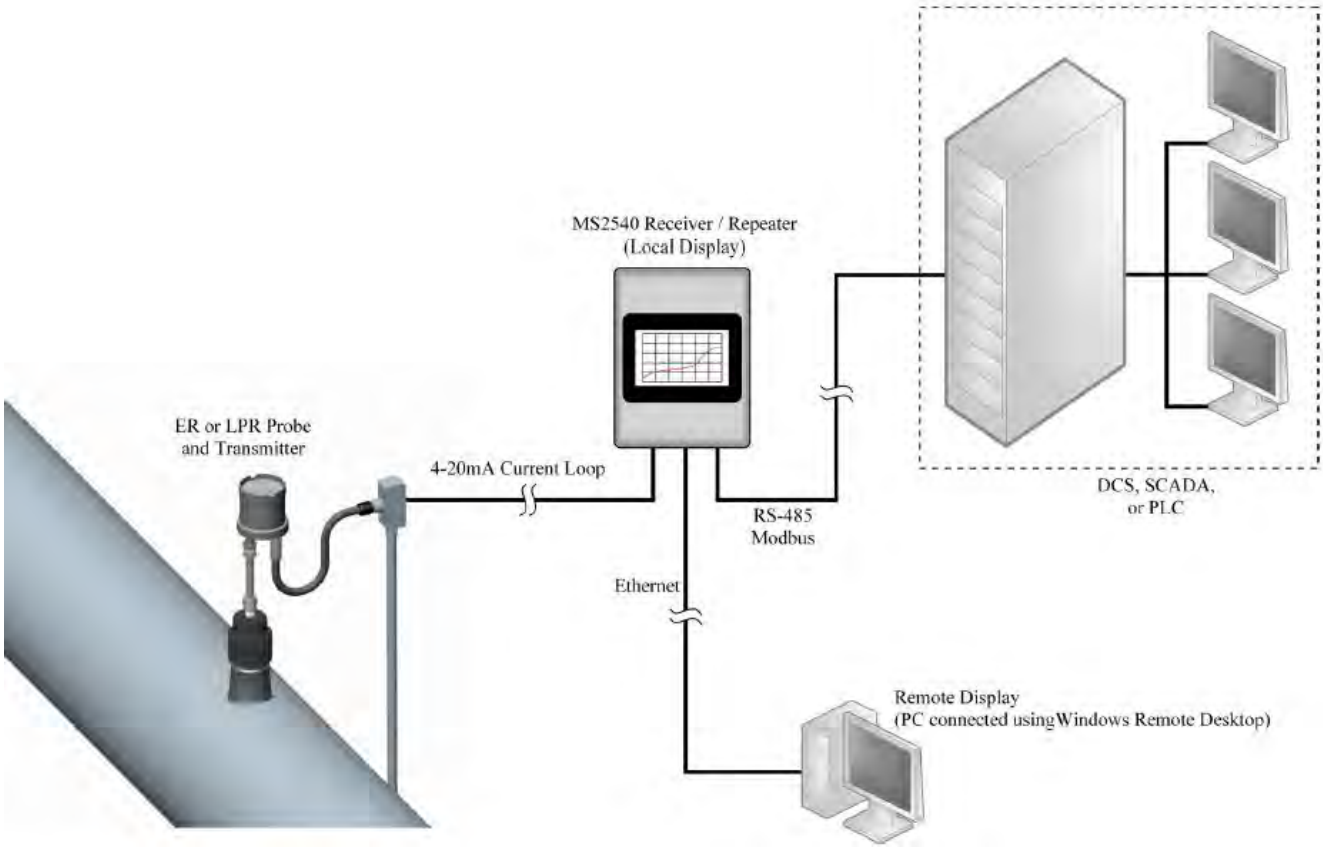

A DIVISION OF BAC CORROSION CONTROL
RCSL (A TRADING DIVISION OF BAC CORROSION CONTROL LTD)
STAFFORD PARK 11, TELFORD, SHROPSHIRE, TF3 3AY
T : +44 (0) 1952 290321 E : sales@rcslgroup.com W: www.rcslgroup.com
MEMBER OF MIDROC EUROPE

5.17
Model MS2540
Data Receiver / Repeater

Model MS2540 Technical Specifications	
MS2540 – Data Receiver / Repeater	
Receiver and Transmitter:	
Input:	4-20mA current loop from one ER or LPR corrosion transmitter
Current Loop Source Voltage:	24 VDC
Input Impedance:	250 Ohms
Maximum transmitter to receiver distance:	3048 metres (10,000 feet)
Output:	
Outputs:	RS-485 Modbus, Ethernet
Display:	
Type:	Color touch screen
Displayed Values	Metal Loss (mils or mm) or Corrosion Rate (mpy or mm/y)
Resolution	+/- 0.1 mpy or 0.01 mil
Power Supply:	
Supply Voltage:	100 to 240 VAC, 1 phase, 50/60 Hz
Current:	< 2 Amps
Physical Data:	
Operating Temperature:	0° to 50°C (32° to 122°F)
Weight:	1.9 Kg (4.0 lbs.)
Mounting Type:	Panel Mount
Included Accessory Items:	
Power cord, mounting tabs	

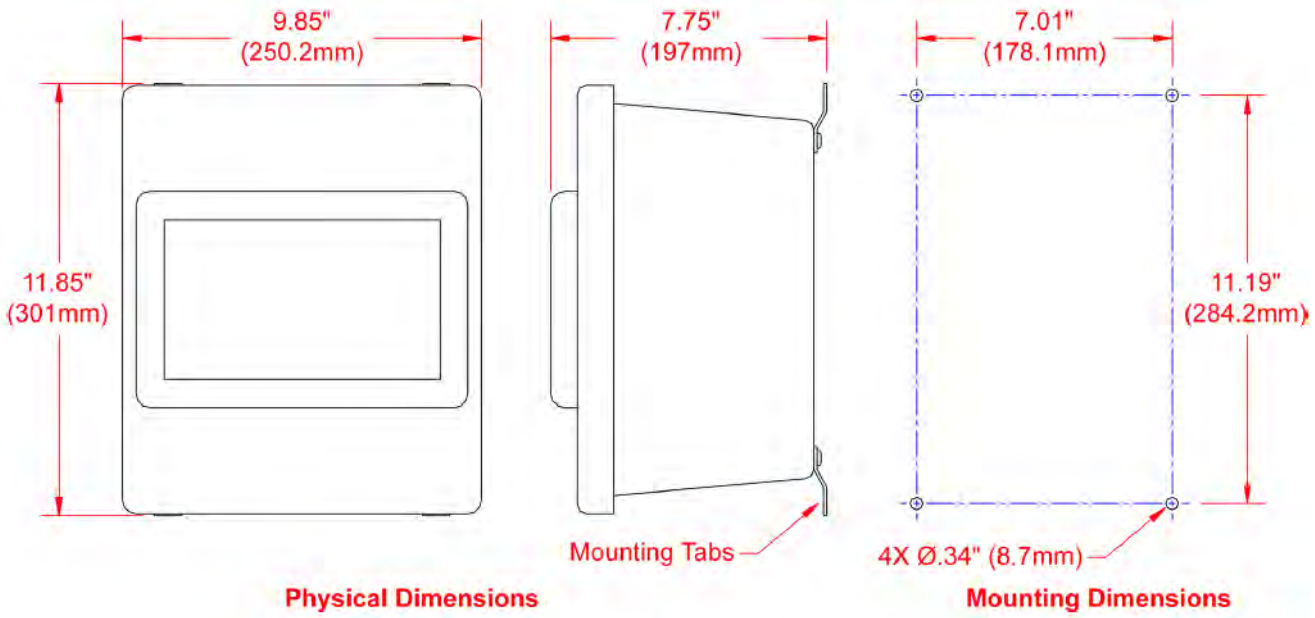

A DIVISION OF BAC CORROSION CONTROL

RCSL (A TRADING DIVISION OF BAC CORROSION CONTROL LTD)
STAFFORD PARK 11, TELFORD, SHROPSHIRE, TF3 3AY
T : +44 (0) 1952 290321 E : sales@rcslgroup.com W: www.rcslgroup.com

MEMBER OF MIDROC EUROPE

5.18
Probe Adaptors For The Two Inch Retrievable System

Retrievable Electrical Resistance Probes and Linear Polarisation Resistance Probes are held in place by the hollow plug assembly.

The probe's instrument connection point is situated within the hollow plug, as per the illustration. This is too low for standard cables to reach, therefore a probe adaptor is required for connection of an instrument.

For permanently installed instruments and / or for use with pressure retaining covers a fixed probe adaptor should be used, this has an adjustable ½" NPT fitting for attachment to the plug / cover as applicable.

It is recommended that the fixed probe adaptor has the blow-out preventer, this is fitted as standard to the 700640 probe adaptor (please see illustrations below). This will prevent the probe adaptor rod from leaving the fitting in the event of it being exposed to pressure.

A portable probe adaptor is generally used with portable instruments, it has no fitting and is only used when taking measurements, it is not permanently installed.

The adaptor has a 316 S/S body. Exotic alloys are not required, the adaptor is isolated from the process.

The receptacle is for the connection to instrument, it has male pins and has a dust shield secured by a ball chain. The rubber adaptor has female sockets for connection to the probe.

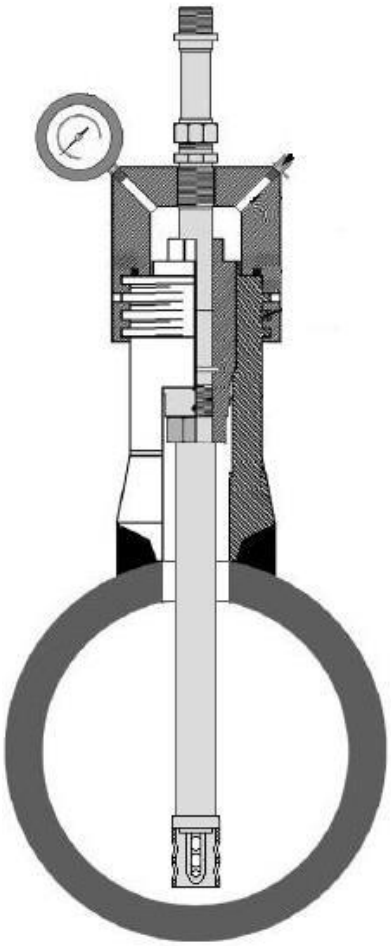

Product Code: 700640 Fixed Probe adaptor is shown, fitted through pressure retaining cover

Product Code: 700640 "6-Pin Fixed Probe Adaptor, Standard Connector"

6-Pin Male to 6-Pin Female Adaptor With Adjustable ½" NPT Fitting, Blow-Out Preventer and Standard Connector. For use with permanently installed instruments and / or with pressure retaining covers.

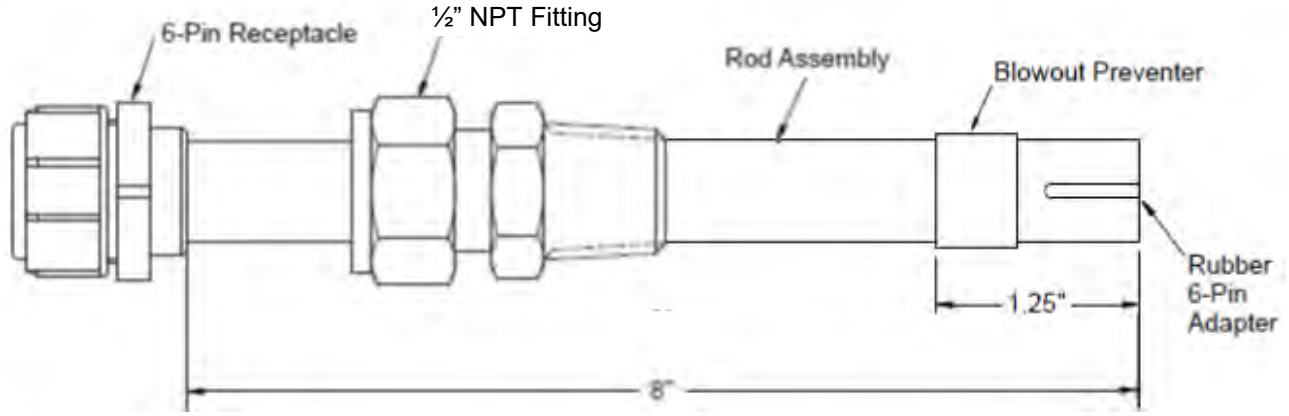

A DIVISION OF BAC CORROSION CONTROL
RCSL (A TRADING DIVISION OF BAC CORROSION CONTROL LTD)
STAFFORD PARK 11, TELFORD, SHROPSHIRE, TF3 3AY
T : +44 (0) 1952 290321 E : sales@rcslgroup.com W: www.rcslgroup.com
MEMBER OF MIDROC EUROPE

Product Code: 700319 "6-Pin Portable Probe Adaptor"

6-Pin Male to 6-Pin Female Adaptor with Standard Connector. For use with portable instruments.

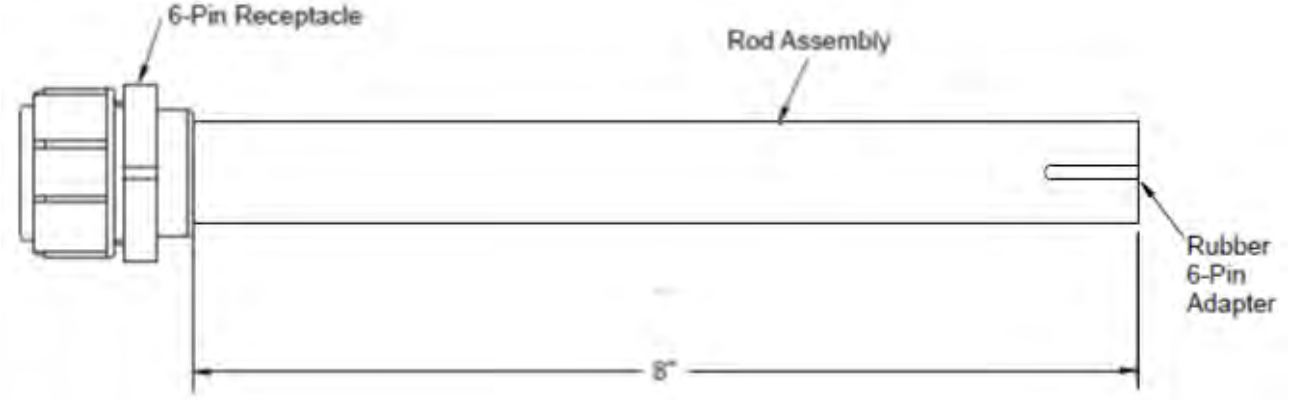

Product Code: HA7001 01 158 "6-Pin Fixed Probe Adaptor, Small Connector"

6-Pin Male to 6-Pin Female Adaptor with Adjustable ½" NPT Fitting, Blow-Out Preventer and Small Connector. For use with permanently installed instruments and / or with pressure retaining covers.

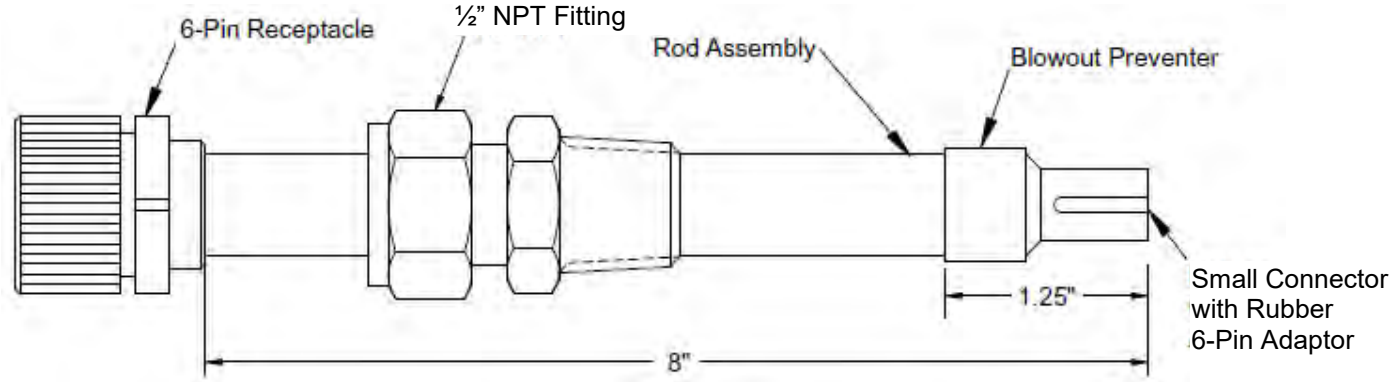

Ordering Product Code Generation For Other Probe Adaptor Variations

Model			
HA7001	Probe Adaptor		
	Type		
	00	6-Pin Male to 6-Pin Female with Fitting, without Blowout Preventer	
	03	5-Pin Male to 3-Pin Female (Small) with Blowout Preventer and Fitting	
	06	5-Pin Male to 6-Pin Female (Small) with Blowout Preventer and Fitting	
		Body Material	
		158	316 S/S
HA7001	**00**	**158**	**Example of Ordering Product Code**

All pictures are for illustrative purposes only, supplied product may differ.

A DIVISION OF BAC CORROSION CONTROL
RCSL (A TRADING DIVISION OF BAC CORROSION CONTROL LTD)
STAFFORD PARK 11, TELFORD, SHROPSHIRE, TF3 3AY
T : +44 (0) 1952 290321 E : sales@rcslgroup.com W: www.rcslgroup.com
MEMBER OF MIDROC EUROPE

5.19
Instrument & Probe Extension Cables

It is recommended that the instrument connection point is located as close as possible to the probe location, however there are many situations where that is not practical. Therefore extension cables are available.

The extension cables are manufactured from high quality cable, with Amphenol type military connectors to provide a weather tight seal.

Two types of cable are available, 5 pin or 6 pin connectors.

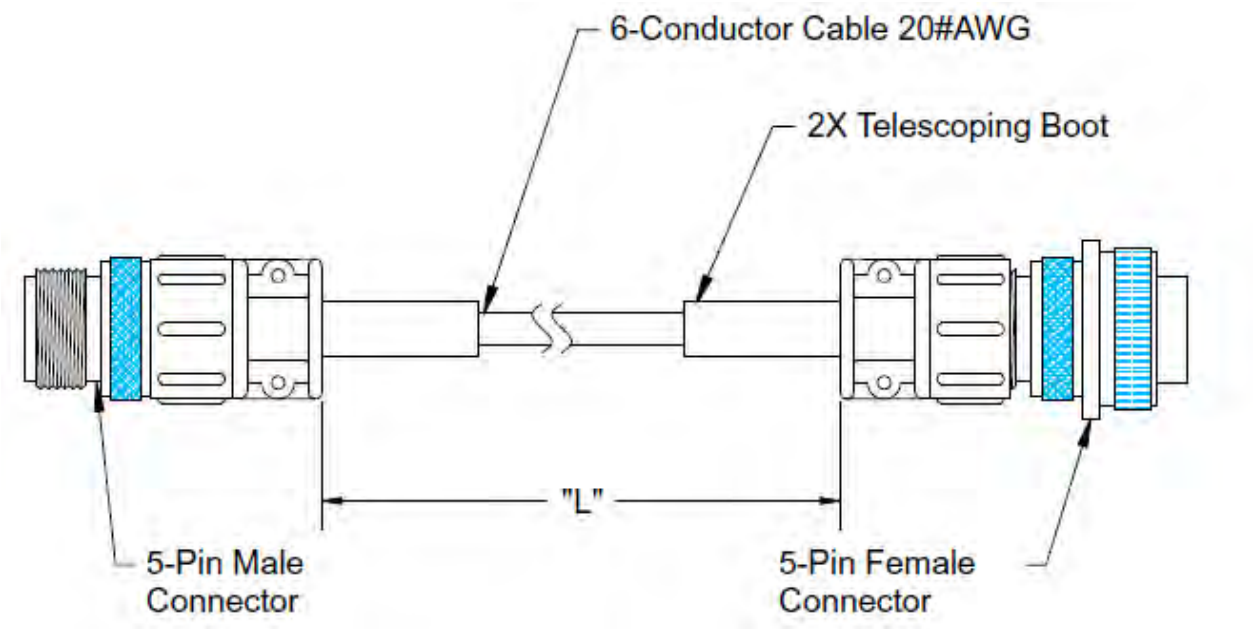

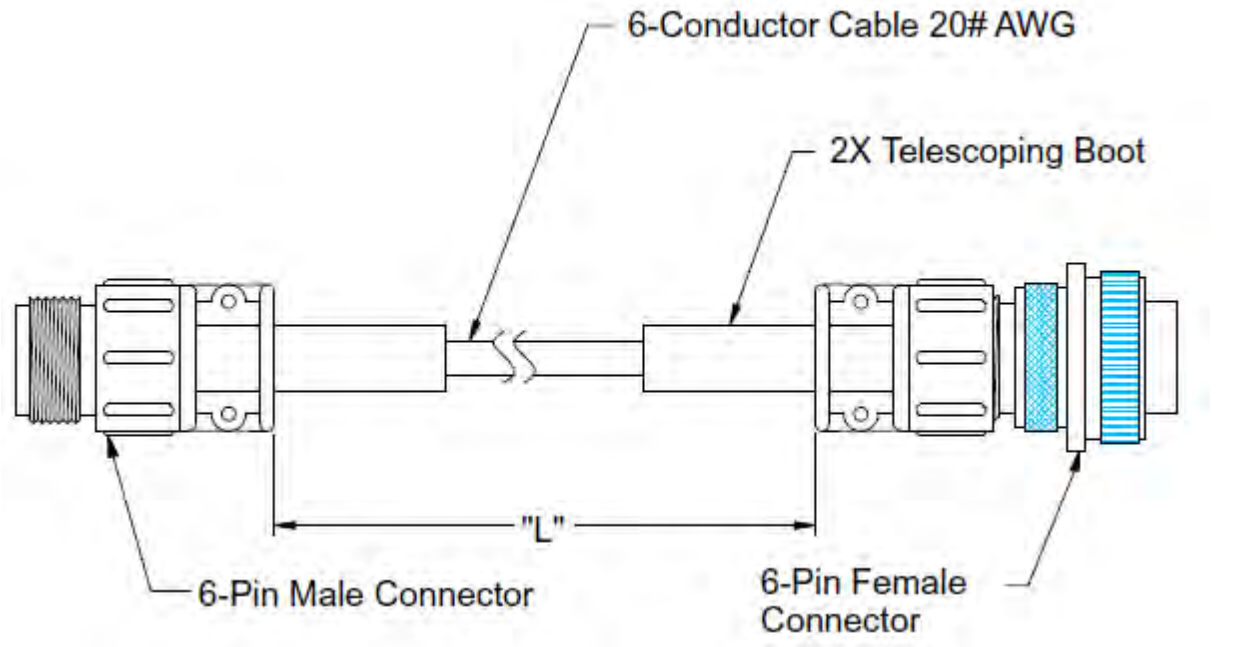

A DIVISION OF BAC CORROSION CONTROL
RCSL (A TRADING DIVISION OF BAC CORROSION CONTROL LTD)
STAFFORD PARK 11, TELFORD, SHROPSHIRE, TF3 3AY
T : +44 (0) 1952 290321 E : sales@rcslgroup.com W: www.rcslgroup.com
MEMBER OF MIDROC EUROPE

Extension Cable Ordering Product Code Generation			
PS5	Probe Extension Cable		
	Number Of Pins		
	547	5 Pins	
	468	6 Pins	
		Cable Length In Feet (5 Feet Length Increments)	
		005	5 Feet
		010	10 Feet
		015	15 Feet
		020	20 Feet
		025	25 Feet
		030	30 Feet
		035	35 Feet
		040	40 Feet
		045	45 Feet
		050	50 Feet
PS5	**468**	**020**	**Example Of Cable Ordering Product Code**

A DIVISION OF BAC CORROSION CONTROL
RCSL (A TRADING DIVISION OF BAC CORROSION CONTROL LTD)
STAFFORD PARK 11, TELFORD, SHROPSHIRE, TF3 3AY
T : +44 (0) 1952 290321 E : sales@rcslgroup.com W: www.rcslgroup.com
MEMBER OF MIDROC EUROPE

6.0
Chemical Injection & Sampling

Sub-Section No.

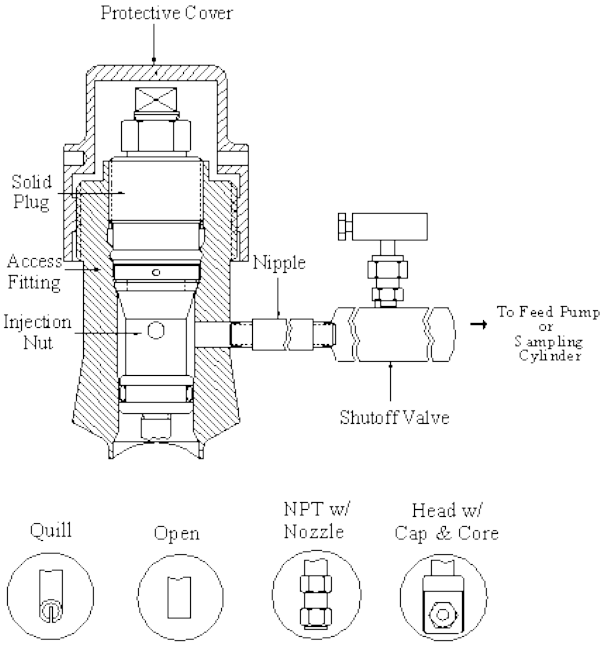

Figure 1

Picture is for illustrative purposes only, various options are available

INJECTION & SAMPLING

Injection and sampling systems are fundamental to corrosion control and process control programs. They are applicable to a large variety of processes in the petroleum, chemical and water treatment industries. Injection systems may be used for the injection into the system of a wide range of chemicals such as biocides, demulsifiers, corrosion inhibitors, oxygen scavenger, glycol and mono-ethylene glycol, dewaxers, methanol, odourisers and a wide range of product activities.

Injection systems may be as simple as using an open-ended tube that allows for even distribution of the injected chemical or as complex as using a head with a cap and core to obtain precise atomisation of the chemical.

Sampling systems, as the name implies are used to take samples of the process fluid medium. Such samples are the analysed in the laboratory for inhibitor concentration levels, the presence of metal ions, oxygen levels, scale forming compounds and a wide range of process parameters.

The art of chemical injection is a complex technology. Irrespective of the type of injection or injected fluid, several factors relative to the process system and the injection system must be considered. Principle factors are:

PRESSURE DIFFERENTIAL

This is the difference between the injection pump pressure and the process line or vessel pressure. Ideally the pressure differential should be 8 bar (100psi.) However, varied injection rates can be achieved by changing the pressure differential.

TEMPERATURE

Temperature directly affects viscosity. Ideally the temperature of both the injected chemical and the line product should be about 21°C (70°F.)

VISCOSITY

This is the measure of fluid's resistance to flow. The more viscous the fluid the smaller the spray angle.

SPRAY ANGLE

Spray angle is affected by viscosity, spray distance and pressure differential.

SPRAY COVERAGE

This is calculated theoretical area coverage.

SPECIFIC GRAVITY

The specific gravity of a liquid is the density ratio of the liquid to water. The flow rate of a liquid is affected by its specific gravity.

A DIVISION OF BAC CORROSION CONTROL
RCSL (A TRADING DIVISION OF BAC CORROSION CONTROL LTD)
STAFFORD PARK 11, TELFORD, SHROPSHIRE, TF3 3AY
T : +44 (0) 1952 290321 E : sales@rcslgroup.com W: www.rcslgroup.com
MEMBER OF MIDROC EUROPE

INJECTION RATE

This is the amount of chemical to be injected within a specified period and is defined as litres per day (LPD) gallons per hour (GPH) etc. Injection systems are available for injection rates varying from 0.38 litres/hour (0.1 GPH) to 250 litres/hour (65.7GPH).

Injection may be via a simple open-ended tube or a quill that relies upon a natural turbulence within the pipeline to disperse the injected chemical and to accomplish even distribution. There is no restricting orifice and such systems tend to be clog proof even when using unscreened chemicals. A disadvantage of such systems is that at low flow rates there tends to be an accumulation of the injected chemical at the pipe wall surface below the injection point.

INJECTION POINT

The maximum fluid velocity is usually at the centre of the line hence the most effective position for injection is generally at the centre of the pipe in the direction of the product flow. If the line is to be pigged, the injection point may be flush with the pipe wall. This eliminates the need to remove the injection probe before pigging operations begin. On pipelines this means that injection is perpendicular to the product flow. Top of the line may be used if the injection is required to be oblique or horizontal to the product flow.

A more comprehensive discussion of the factors to be considered in the design of chemical injection systems is contained in the RCSL injection primer.

Examples of two inch access fitting system injection and sampling assemblies are shown below. A sampling system uses the same components as the injection system, but the tube is usually straight cut rather than scarf (angled) cut.

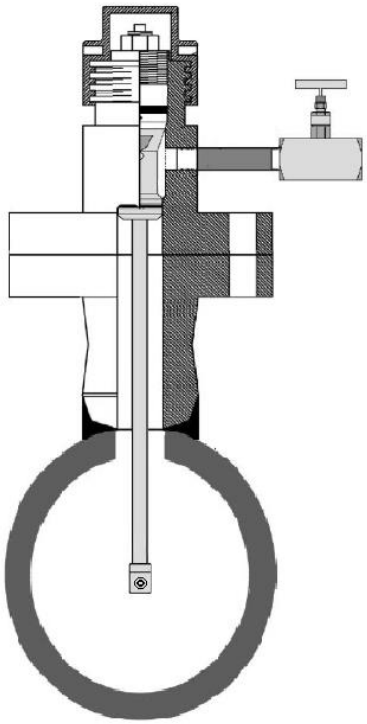

Flanged Access Fitting with NPT Tee, Nipple, Shut Off Valve & X Head Injection Tube.

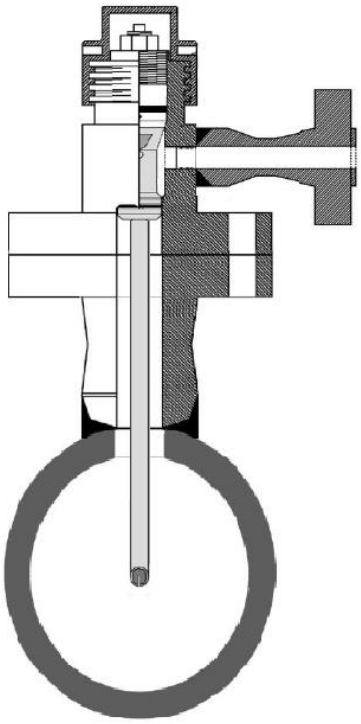

Flanged Access Fitting With Welded Flanged Tee & X Quill Injection Tube

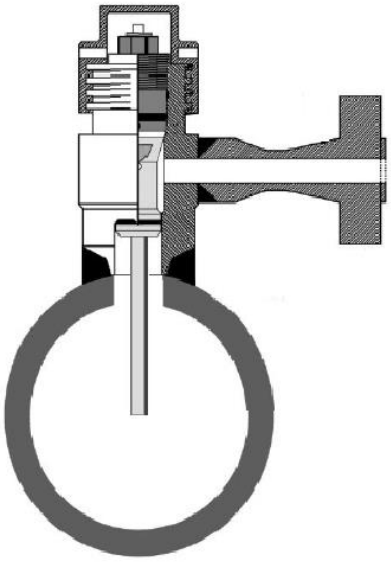

Flare-weld Access Fitting With Welded Flanged Tee & X Open Sampling Tube

A DIVISION OF BAC CORROSION CONTROL
RCSL (A TRADING DIVISION OF BAC CORROSION CONTROL LTD)
STAFFORD PARK 11, TELFORD, SHROPSHIRE, TF3 3AY
T : +44 (0) 1952 290321 E : sales@rcslgroup.com W: www.rcslgroup.com
MEMBER OF MIDROC EUROPE

The various components of the assembly are:

1. **AN ACCESS FITTING BODY** – with a side tee through which the fluid transfer takes place.
2. **Access FITTING TEE** – the tee may be threaded or welded. Welded tees are either flanged or butt-weld nipple. Threaded tees are based on an NPT tapped hole in the fitting body (please see 6 & 7). The tee size is rated according to the injection rate and injection and viscosity of the injection chemical.
3. **A SOLID PLUG ASSEMBLY** – this is inside the fitting body and is used to carry an injection nut which has the injection tube/nozzle assembly screwed to its base.
4. **AN INJECTION/SAMPLING NUT** – this is a multiple use nut that replaces the nut of the solid plug. It is used to direct the injected product to the injection tube or atomisation device. An injection nut sizing chart is shown in table 1.
5. **THE INJECTION OR SAMPLING TUBE OR NOZZLE** – The various forms offered are:
   a. **X OPEN.** This is an open tube. The natural turbulence within the pipeline is used to ensure even distribution. The pressure differential is experienced at the orifices so it is necessary to control the injection rate at the injection pump or the shut off valve.
   b. **X QUILL.** This has a scarf and quill inserted at the open end. It utilises the turbulence created by its unique design to achieve distribution of the injected chemical into the product flow. Injection tube x quill are clog proof and give extremely good dispersion of the inhibitor provided that the product flow is 4.6 metres per second or greater. As with the open tube, injection rate must be controlled at the injection pump or shut off valve.
   c. **X NPT.** Again similar to the open tube but is threaded at the dispersion end, thus allowing attachment of female nozzle assemblies. Injection may be perpendicular with the use of a straight nozzle or parallel with a right angle nozzle.
   d. **X HEAD.** This is the usual style used for parallel injection at the centre of the line. The head is integral with the injection tube and is designed to accept the cap and core from a standard nozzle assembly.
6. **NIPPLES.** Nipples are used with threaded tee access fitting bodies and are the means of connecting the shut off valve to the access fitting body.
7. **SHUT OFF VALVES.** These are required to cut-off the injection flow and maintain pressure integrity through the tee when the solid plug assembly is being removed or replaced. They are also used to control the injection flow rate. A nipple and shut off valve sizing chart is given in Table 3.
8. **CHECK VALVE**. This is an optional item, various designs are available for installation between the injection tube and the injection nut, or in the inlet line to the access fitting body tee.
9. **ATOMISATION NOZZLES AND CAP AND CORES.** These are the various devices which, attached to the dispersion end of the injection tube, permit atomisation of the fluid as it is injected into the product line or vessel.
   Nozzle assemblies are complete units which contain caps, cores, and strainers. They are available with both female and male NPT threads to match the thread on the injection tube x NPT. Caps, cores and strainers are component parts of the nozzle assemblies. They have male UNF threads which engage with the UNF threads in the dispersion body of the injection tube x head.
   The correct nozzle size may be determined from Table 4.
10. **THE INJECTION OR FEED PUMP.** The injection pump must be capable of generating sufficient injection line pressure to overcome the line operating pressure and thus create the required pressure differential across the atomising nozzle or injection tube.

A DIVISION OF BAC CORROSION CONTROL
RCSL (A TRADING DIVISION OF BAC CORROSION CONTROL LTD)
STAFFORD PARK 11, TELFORD, SHROPSHIRE, TF3 3AY
T : +44 (0) 1952 290321 E : sales@rcslgroup.com W: www.rcslgroup.com
MEMBER OF MIDROC EUROPE

MATERIALS OF CONSTRUCTION

As standard the injection nut, quill, nipple and shut off valve are manufactured from 316 stainless steel.

As standard the injection nut seals are 1x Viton O-ring with 2x PTFE back up rings.

These materials comply with the requirements of NACE Standard MR 01-75. Recommended materials for sulphide stress cracking environments.

Other materials are available, please see the injection nut and quill product code generation charts in the how to order section.

HOW TO ORDER

A) The access fitting body style and tee size may be determined from the access fitting product literature.

B) The injection / sampling nut size and Product Code may be determined from Table 1.

Table 1 – Injection Nut Product Code 7002XX-0XX					
Nut thread Size	**Nut Length**				
	1.75"	3"	3.5"	3.75"	5.50"
	Product Code	Product Code	Product Code	Product Code	Product Code
⅛" (3.2mm)	700219-0XX	700220-0XX	700227-0XX	700231-0XX	700235-0XX
¼" (6.4mm)	700221-0XX	700222-0XX	700228-0XX	700232-0XX	700236-0XX
½" (12.7mm	700223-0XX	700224-0XX	700229-0XX	700233-0XX	700237-0XX
¾" (19mm)	700225-0XX	700226-0XX	700230-0XX	700234-0XX	700238-0XX
Access Fitting Height	5.25"	6.25"	6.25"	7.25"	8.25"

Injection Nut Product Code: 7002XX-0XX

Nut Material	Injection / Sampling Nut Seals
1. – 316	0. – Not Required
2. – 316L	1. – Viton O-Ring, PTFE Back Up Ring
3. – C276	2. – Ethylene Propylene O-Ring, VESPEL Back Up Ring
4. – UNS S21800	3. – KALREZ O-Ring, VESPEL Back Up Ring
5. – CS (Please Specify)	4. – No O-Ring, UNS S21800 Back Up Ring
6. – UNS S31803	5. – HYDRIN O-Ring, PTFE Back Up Ring
7. – UNS N06625	6. – Other (Please Specify)
8. – UNS N08825	7. – NOT USED
9. – Ti	8. – AED HNBR O-Ring, (Please Specify), PTFE Back Up Ring
A. – F44	9. – NOT USED
B. – UNS S32750	A. – AF69/90 O- Ring, PTFE Back Up Ring
C. – UNS S32760	B. – Nitrile O- Ring, PEEK Back Up Ring
D. – A105	C. – FR 25/90 O- Ring, PTFE Back Up Ring
E. – A350LF2	D. – HNBR Elast-O-Lion 101 (RGD) O- Ring, PEEK Back Up Ring
F. – UNS S32205	E. – KALREZ O- Ring, PTFE Back Up Ring
Z. – Other (Please Specify)	F. – FR 58/90 (Viton B) AED O- Ring, PTFE Back Up Ring
	G. – Viton AED O- Ring, PEEK Back Up Ring
	H. – AFTLAS O- Ring, PEEK Back Up Ring
	I. – Viton AED O- Ring, PTFE Back Up Ring
	J. – Ethylene Propylene (EDPM) O- Ring, PTFE Back Up Ring
	K. – Nitrile O- Ring, PTFE Back Up Ring
	L. – HNBR Elast-O-Lion 985 O- Ring, PEEK Back Up Ring
	M. – VERMILION® FOUR O- Ring, PTFE Back Up Ring
	N. – Nitrile O-ring, Nylon Back Up Ring
	O. – HNBR Elast-O-Lion 101 (RGD) O- Ring, Nylon Back Up Ring
	P. – HNBR Elast-O-Lion 985 O- Ring, Nylon Back Up Ring
	Q. – HNBR Elast-O-Lion 101 (RGD) O- Ring, PTFE Back Up Ring

A DIVISION OF BAC CORROSION CONTROL
RCSL (A TRADING DIVISION OF BAC CORROSION CONTROL LTD)
STAFFORD PARK 11, TELFORD, SHROPSHIRE, TF3 3AY
T : +44 (0) 1952 290321 E : sales@rcslgroup.com W: www.rcslgroup.com
MEMBER OF MIDROC EUROPE

C) Determine the injection tube type required. Determine the injection point. Calculate the injection tube length using the sizing formulas. Use this information to determine the injection tube product code from Table 2.

Table 2 – Injection Tube Product Code: IQ-XX-XX-XX-XXXX-X					
	Type	Material	Tube & NPT Size	Length (inches)	Tube Schedule
IQ	-XX	-XX	-XX	-XXXX	-X
	01 – X Open	01 – 316 S/S	01 – ⅛"	Open/ Quill/ NPT Available from 1.25" to 30" X Head Available from 2.25" to 30" Example 2.25" = 0225 Example 26.625" = 2662	1 – Sch.80
	02 – X Quill 45°	02 – (Other)	02 – ¼"		2 – Sch.160
	03 – X NPT	03 – UNS S31803	03 – ½"		3 – Sch.XXS
	04 – X Head (9/16")	04 – UNS S32750	04 – ¾"		Z – Other (Please Specify)
	05 – X Quill 60°	05 – UNS S32760			
	06 – X Head (1/4" NPT)	06 – UNS N06625			
	0Z – Other (Please Specify)	07 – UNS N08825	Note: Not all material, size and schedule combinations are available. Please specify the length using 0.125" increments.		
		08 – Carbon Steel (Please specify)			

D) A shut off valve and nipple to match the NPT tee of the access fitting body may be selected from Table 3 and Table 4 respectively.

	Table 3 - Valve Product Code: 70032X-X-X		
70032	X	-X	-X
	Access Fitting NPT Tee Size	Valve Pressure Rating	Material Code
	2 = ¼"	1 = 6,000psi	1 = 316 S/S
	3 = ½"	2 = 10,000psi	2 = 230M07 Carbon Steel
	4 = ¾"		3 = Monel 400
	5 = 1"		4 = C276
			5 = UNS S31803
			6 = UNS S32750
			7 = UNS S32760
			8 = UNS N06625
			9 = UNS N08825
			Z = Other (Please Specify)

Table 4 - NPT Nipple 100mm Product Code: 7000XX-X-X		
7000XX	-X	-X
Nipple Tube & NPT Size	Wall Schedule	Material Code
¼" 700018	1 = 80	1 = 316 S/S
½" 700019	2 = 160	2 = Carbon Steel (Please Specify)
¾" 700020	Z = Other (Please specify)	3 = UNS S31803 / UNS S32205
1" 700021		4 = UNS S32750
Note: Not all material, size and schedule combinations are available.		5 = UNS S32760
		6 = UNS N06625
		7 = UNS N08825
		Z = Other (Please Specify)

E) If applicable, a suitable nozzle assembly / cap and core can be selected from Table 5. The stated product codes are for 316 S/S material. Other flow rates and materials are available to special order.

Table 5 – Nozzle Assembly / Cap and Core Product Code: 7000XX					
Product Code	Orifice Diameter/ Nozzle Type	GPH Capacity & Pressure Differential			
		40 PSI	60 PSI	80 PSI	100 PSI
700030	0.30 – ¼" NPT Fem.N	0.3	0.36	0.42	0.48
700031	0.40 – ¼" NPT Fem.N	0.4	0.48	0.56	0.64
700032	0.60 – ¼" NPT Fem.N	0.6	0.72	0.84	0.96
700034	0.30 – ¼" NPT Flush	0.3	0.36	0.42	0.48
700035	0.40 – ¼" NPT Flush	0.4	0.48	0.56	0.64
700036	0.60 – ¼" NPT Flush	0.6	0.72	0.84	0.96
700038	0.30 –Cap/core 9/16"	0.3	0.36	0.42	0.48
700039	0.40 – Cap/ Core 9/16"	0.4	0.48	0.56	0.64
700040	0.60 – Cap/Core 9/16"	0.6	0.72	0.84	0.96

RCSL (A TRADING DIVISION OF BAC CORROSION CONTROL LTD)
STAFFORD PARK 11, TELFORD, SHROPSHIRE, TF3 3AY
T : +44 (0) 1952 290321 E : sales@rcslgroup.com W: www.rcslgroup.com

6.2
Model IP4000
Retractable Injection & Sampling
For The Low Pressure Retractable System

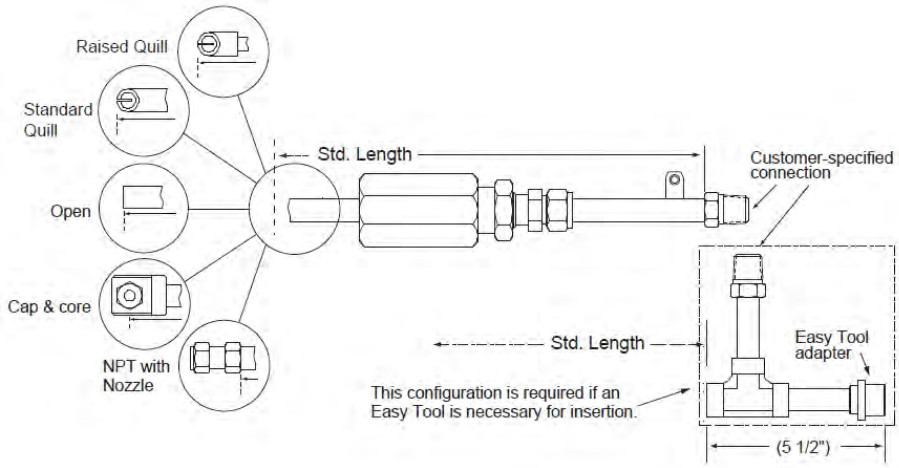

All dimensions are in inches

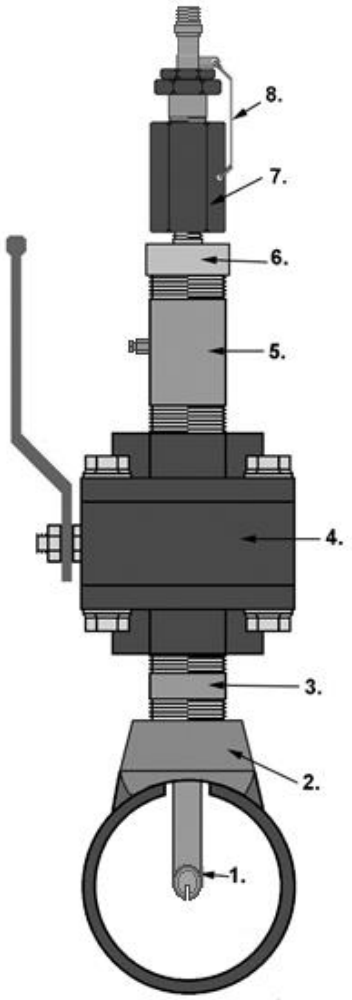

Picture is for illustrative purposes only, flanged connection is also available

The Model IP4000 Injection and Sampling System is a retractable unit commonly used in field and plant applications. A specially designed packing gland is used with the unit for insertion into or retraction from a pressurised system without a process shutdown. The unit is designed to mount onto a 1 inch piping system, but can easily be adapted to fit your specific requirements.

The unit assembly consists of a packing gland and an insertion rod with an injection/ sampling fitting. The fitting, which is threaded or welded to the end of the rod, can be either a quill, open, cap and core or nozzle assembly type. A safety cable is also provided to prevent blowout.

In systems with pressure over 150psi, an adaptor for the Easy Tool may be added to the unit.

Key	
1 – Injection Quill	5 – TBE Pipe Nipple
2 – Thredo-let	(usually fitted with bleed valve)
(flanged connection is available)	6 – Thread adaptor (if required)
3 – TBE Pipe Nipple	7 – Packing gland
4 – Full Bore Ball Valve	8 – Safety chain
(flanged connection is available)	Items 1-6 are supplied separately from the IP4000

Standard packing material in the packing gland is Teflon® however, Grafoil® packing can be provided for high temperature applications. Model IP4000 units are available in different lengths and materials.

Specifications				
Body Material	316 Stainless Steel*		Order Length	I.L. (max)
Packing Material	Teflon® (standard) or Grafoil		24"	16"
Temperature Rating	260°C / 500°F Teflon®		30"	22"
Temperature Rating	454°C / 850°F Teflon®		36"	28"
Pressure Rating	2000 PSI / 138 Barg**		42"	34"
Mounting	Minimum 1" Full Bore Valve			

* Other material options are available

** Easy Tool (Product Code: SR2159-ERXX) is recommended for insertion or retraction in systems with pressure over 150 psi

RCSL (A TRADING DIVISION OF BAC CORROSION CONTROL LTD)
STAFFORD PARK 11, TELFORD, SHROPSHIRE, TF3 3AY
T : +44 (0) 1952 290321 E : sales@rcslgroup.com W: www.rcslgroup.com

Model IP4000 Ordering Product Code Generation						
IP45	Injection and Sampling System 1" NPT Female Thread, Packing Gland with Teflon®					
IP75	Injection and Sampling System 1" NPT Female Thread, Packing Gland with Grafoil®					
IPB7	Injection and Sampling System 1½" NPT Male Swage Nipple (used with head, cap, core)					
IP00	Injection & Sampling System Replacement Insertion Rod					
	Mounting Material (Packing Gland and Rod)					
	22	316				
	44	C276				
		Injection Tip Option				
		000	N/A			
		010	Quill (straight)			
		020	Quill (raised)			
		030	Open			
		040	¼" NPT (female) with nozzle*			
		050	Head with cap and core (9/16") – Must use Swage Nipple			
		060	¼" NPT (male) with nozzle*			
		070	3/8" NPT (male) with nozzle*			
		090	½" NPT (female) with nozzle*			
			Tube Size			
			1	3/8"		
			2	½"		
			3	5/8"		
				Length		
				24	16 inches max. insertion length	
				30	22 inches max. insertion length	
				36	28 inches max. insertion length	
				42	34 inches max. insertion length	
					Dry End Mount Options	
					01	Blanked off
					02	½" NPT
					03	¾" NPT
IP45	**22**	**010**	**2**	**24**	**02**	**Example of IP4000 Ordering Product Code**

Note: For alloys, sizes, or other special requirements not listed, please contact our sales department.

Safety Clamp

Safety clamps are available separately, these provide additional support to the packing gland and safety chain to control the positioning of the coupons within the pipe.

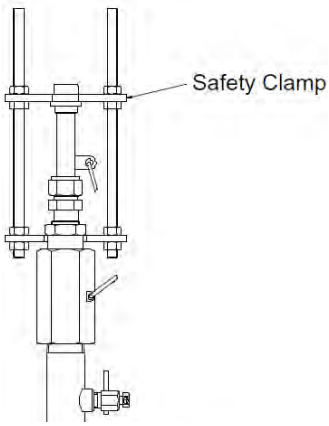

Safety Clamp Assembly Product Codes:	
PS5463141**XX**	Replace XX with Length, e.g. PS5463141**24**
PR5637158	Easy Tool / Safety Clamp Adaptor

The safety clamp length must be increased if the IP4000 is configured with the 90° connection for use with the easy tool (please see the drawing on page 1). Please contact RCSL for further information.

RCSL (A TRADING DIVISION OF BAC CORROSION CONTROL LTD)
STAFFORD PARK 11, TELFORD, SHROPSHIRE, TF3 3AY
T : +44 (0) 1952 290321 E : sales@rcslgroup.com W: www.rcslgroup.com

6.3
Fixed Quills For Chemical Injection & Sampling
For Direct Mounting Via Flanged Branch or Pipe Plug

Fixed quills are heavy duty products, suitable for chemical injection and sampling applications where regular removal is not required.

Various designs and materials of construction are available to suit customer's requirement, examples of which are shown in this data sheet. Please contact RCSL's Sales Department to discuss your specific requirement.

Fixed Threaded Quill

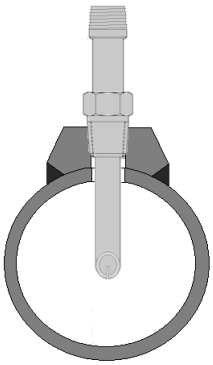

This design is for connection via a threaded pipe plug welded to the quill.

Example shown also has NPT threaded connection for injection / sampling and a slotted scarf cut injection quill.

Other quill options include 90° injection head with atomising / fogging nozzle, plain cut and threaded.

Various designs, sizes and materials are available to meet your requirement.

Fixed Flange Quill, Single Flange

This design is for connection between flanged branch and injection connection flange of the same size.

Example shown also has a slotted scarf cut injection quill.

Other quill options include 90° injection head with atomising / fogging nozzle, plain cut and threaded.

Various designs, sizes and materials are available to meet your requirement.

Fixed Reducing Flange Quill

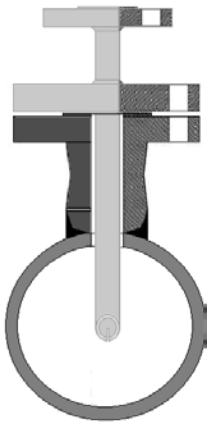

This design is for connection between flanged branch and a smaller injection connection flange, or alternatively the injection connection can be supplied threaded.

Example shown also has a slotted scarf cut injection quill.

Other quill options include 90° injection head with atomising / fogging nozzle, plain cut and threaded.

Various designs, sizes and materials are available to meet your requirement.

A DIVISION OF BAC CORROSION CONTROL
RCSL (A TRADING DIVISION OF BAC CORROSION CONTROL LTD)
STAFFORD PARK 11, TELFORD, SHROPSHIRE, TF3 3AY
T : +44 (0) 1952 290321 E : sales@rcslgroup.com W: www.rcslgroup.com
MEMBER OF MIDROC EUROPE

7.0
Specialist Probes

Sub-Section No.

7.1
Model FC6100
Bio Probe Sample Element Holder
For Direct Mounting Via Pipe Plug

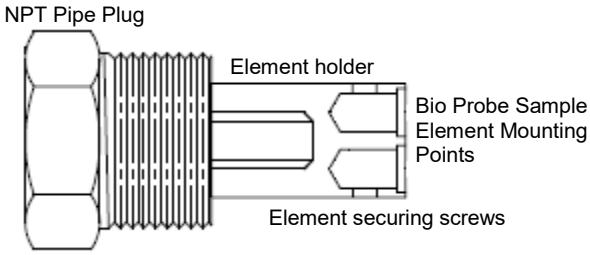

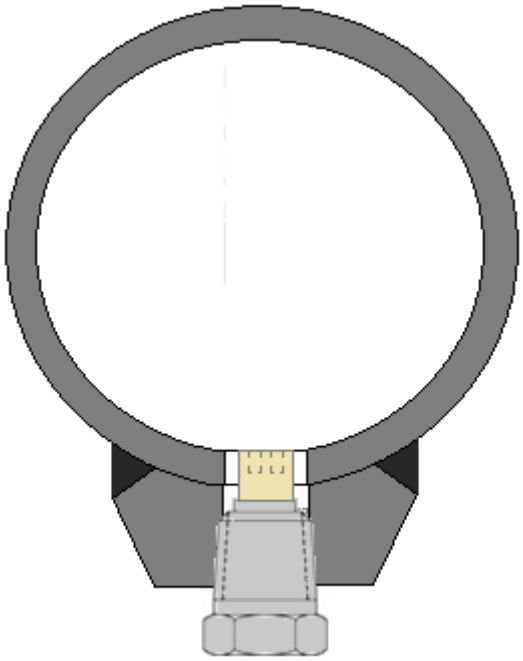

The Model FC6100 is a fixed-length, thredolet-mounted, Bio Probe Element insertion system, to hold 2 Bio Probe Elements.

Process shutdown or process isolation is required for installation and inspection. The probe assembly consists of an insertion rod with male NPT pipe plug (the body), with a non-metallic holder for the elements.

Insertion length (I.L.) is calculated to the end of the element holder in this case. Customers can specify any length required.

Rose Corrosion will need to know the required length from the base of the pipe plug to the end of the element holder.

Materials of construction can be specified by customer. Standard body material is 316/316L S/S, the element holder is available in Nylon or Delrin as standard.

The Bio Probe Elements are supplied separately, material can be specified by client.

Model FC6100 Ordering Product Code Generation Product Code: FC6100-X-X-XXXX				
FC6100	**X**	**X**	**X**	**XXXX**
	| **Pipe Plug Size** 1 – ¾" NPT 2 – 1" NPT 3 – 1½" NPT 4 – 2" NPT Z – Other	| **Body Material** 1 – 316 SS 2 – Hastelloy C276 3 – UNS S31803 DSS 4 – UNS S32750 SDSS 5 – UNS S32760 SDSS 6 – UNS N06625 7 – UNS N08825 8 – 321 SS 9 – 410 SS A – UNS S32205 DSS Z – Other (Please Specify)	| **Sample Element Holder Material** 1 – Nylon 2 – Delrin 3 – PTFE Z – Other (Please Specify)	| **Order Length** 2" to 40" in ⅛" increments. Examples below: 2" = 0200 40" = 4000 2.625" = 0262

RCSL (A TRADING DIVISION OF BAC CORROSION CONTROL LTD)
STAFFORD PARK 11, TELFORD, SHROPSHIRE, TF3 3AY
T : +44 (0) 1952 290321 E : sales@rcslgroup.com W: www.rcslgroup.com

7.2
Model HC6200
Retrievable Bio Probe Sample Element Holder
For The High Pressure Two Inch Access Fitting System

Model HC6200 bio probe is used in the Triseal 2inch Mechanical Access Fitting System to collect samples of bacteria in gas and oil systems.

The bacterial population on a systems metal surfaces more relevant to corrosion than the bacteria population in the system's fluids. This is because only surface or sessile bacteria cause corrosion. Thus a corrosion control program is ineffective unless it kills those bacteria which have formed attached biomasses.

The same bacteria which cause problems in gas pipelines, tanks, vessels, oil wells and water handling systems attach to the bio probe's sample element.

Since the bio probe is designed for high pressure access systems, common throughout the oil field, it becomes a convenient and economical way for sampling corrosion-causing biological activity.

#	Description
1.	Access Fitting Cover
2.	Access Fitting
3.	Solid Plug
4.	**Bio Probe Body**
5.	**Sample Element Holder (non-metallic)**
6.	**Biological Sample Elements**

The standard material for the biological sample elements is 1018 CS. The purpose of the sample element is only to provide an area for the bacteria to settle and colonise. The sample element is single use, therefore the use of alternative materials such as pipe grade or corrosion resistant alloy is not necessary.

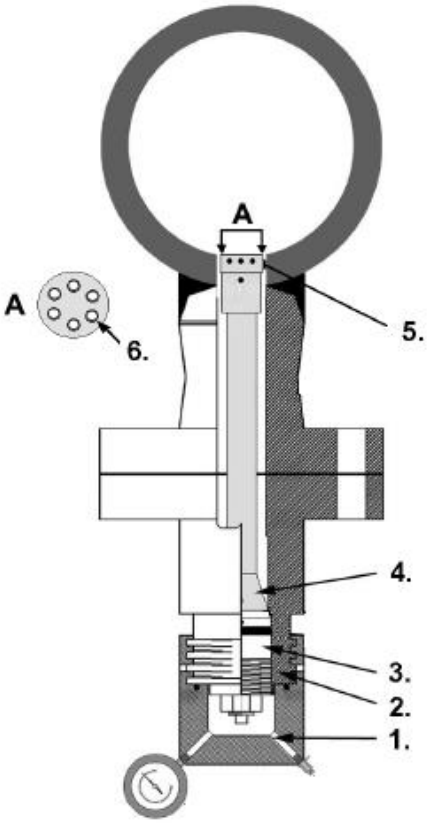

Drawing is for illustrative purposes only, various access fitting options are available.

The ideal installation position is bottom of the line entry (per the drawing above), with the sample studs flush to the line or slightly recessed. This will allow the bacteria to settle on the sample elements.

Model HC6200 Ordering Product Code Generation Product Code: HCXXX-XXXX				
HC6	**X**	**X**	**X**	**XXXX**
	Construction 1 – Welded 2 – Non welded	**Body Material** 1 – 316 SS 2 – Hastelloy C276 3 – UNS S31803 4 – UNS S32750 5 – UNS S32760 6 – UNS N06625 7 – UNS N08825 8 – 321 SS 9 – 410 SS A – UNS S32205 Z – Other (Please Specify)	**Sample Element Holder Material** 1 – Delrin 2 – Nylon 3 – PTFE Z – Other (Please Specify)	**Probe Length** 2" to 40" in 1/8" increments. Examples below: 2" = 0200 40" = 4000 2.625" = 0262

Bio Probe Spare Parts	
Description	**Product Code**
Biological Sample Elements (6 per bio probe)	EL438-1018
Set Screw, 18-8 SS (2 per bio probe)	700900
Sample Element Retaining Set Screw, 316 SS (6 per bio probe)	700938
Replacement Sample Element Holder, Delrin material (1 per bio probe)	3010040014

A DIVISION OF BAC CORROSION CONTROL
RCSL (A TRADING DIVISION OF BAC CORROSION CONTROL LTD)
STAFFORD PARK 11, TELFORD, SHROPSHIRE, TF3 3AY
T : +44 (0) 1952 290321 E : sales@rcslgroup.com W: www.rcslgroup.com
MEMBER OF MIDROC EUROPE

7.3
Model HY7000 / HY7001
Hydrogen Probes
For Direct Mounting or For Use With The Two Inch Access Fitting System

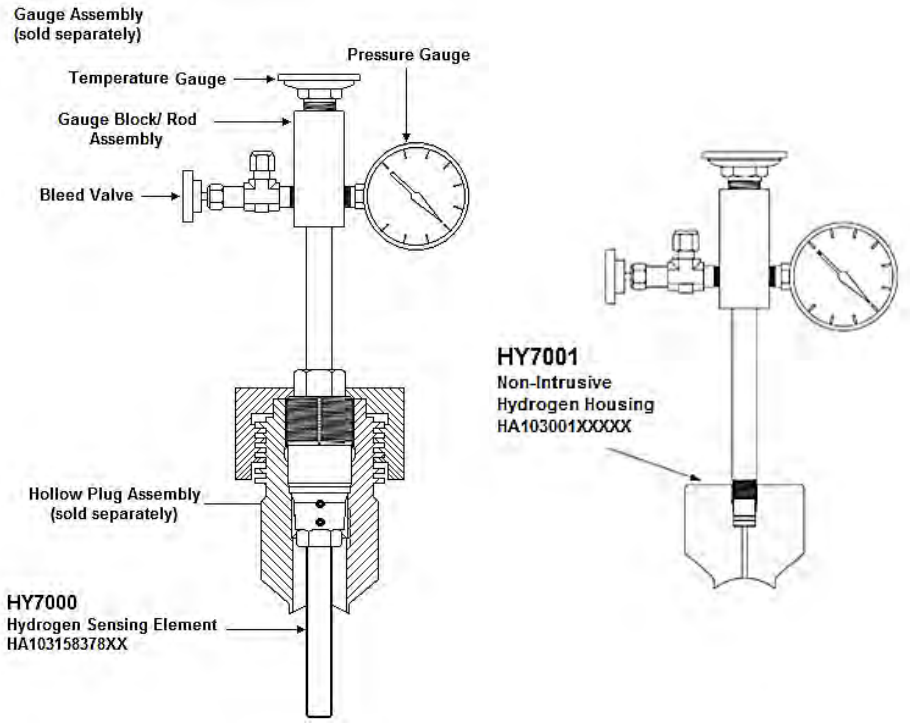

The Model HY7000 and HY7001 are high pressure hydrogen probe configurations which can be used for pressures up to 3600 psi.

Hydrogen probes are commonly used for monitoring hydrogen permeation in steels, which could lead to embrittlement, blistering, and decarburisation resulting in the failure of the material.

The intrusive hydrogen probe assembly consists of three subassemblies, which are sold separately:
- The gauge assembly,
- The hollow plug assembly,
- The HY7000 sensing element assembly.

The gauge assembly consists of a gauge body, a pressure gauge (0-40 psi), a temperature gauge, and a bleed valve.

The sensing element on the HY7000 probe is about 3 inches long and consists of a thin-walled tube which is sealed from the process and allows nascent hydrogen to permeate.

The minimum insertion length (I.L.) of the probe is 6 inches and can be ordered in 1 inch increments.

The HY7001 housing can be machined to fit the flat surfaces of tanks or radiused to fit pipe diameters. The HY7001 consists of two subassemblies, which are sold separately:
- The gauge assembly
- The non-intrusive housing (that can be welded directly to the exterior of the pipe wall or vessel)

Specifications	
Probe Body	316 Stainless Steel
Temperature Rating	260°C / 500°F
Pressure Rating	3600psi / 245 Bar
Mounting	- High Pressure Access system with Hollow Plug (HY7000) - Direct Mount (HY7001)

A DIVISION OF BAC CORROSION CONTROL
RCSL (A TRADING DIVISION OF BAC CORROSION CONTROL LTD)
STAFFORD PARK 11, TELFORD, SHROPSHIRE, TF3 3AY
T : +44 (0) 1952 290321 E : sales@rcslgroup.com W: www.rcslgroup.com
MEMBER OF MIDROC EUROPE

Model HY7000/ HY7001 Ordering Information

Gauge Assembly Parts*	
Product Code	Description
PS5509	Gauge Assembly (complete) Contains all parts listed below
PR6441158	Pressure Gauge
PR6032	Temperature Gauge
PR6034	Bleed Valve
PS5603158	Gauge Block/ Rod Assembly
PR6158158	Gauge Body

*Gauge assembly is sold separately, not included with probe

Model HY7000 Ordering Product Code Generation		
HA103158378	High Pressure Hydrogen Probe Sensing Element	
	Length	
	XX	Length in inches (Ex: 6" = 06). Available in 1" increments starting at 6"
HA103158378	**XX**	**Example of Probe Ordering Product Code**

Model HY7001 Ordering Product Code Generation				
HA103001	Non-Intrusive Hydrogen Housing			
	Alloy			
	158	316		
		Pipeline Size		
		1	2"	
		2	3"	
		3	4"	
		4	6"	
		5	8"-10"	
		6	12"-18"	
		7	20"-26"	
		8	Flat	
			Gauge Block/ Rod Assembly	
			0	Not included
			1	Included
HA103001	**158**	**1**	**0**	**Example of Probe Ordering Product Code**

A DIVISION OF BAC CORROSION CONTROL
RCSL (A TRADING DIVISION OF BAC CORROSION CONTROL LTD)
STAFFORD PARK 11, TELFORD, SHROPSHIRE, TF3 3AY
T : +44 (0) 1952 290321 E : sales@rcslgroup.com W: www.rcslgroup.com
MEMBER OF MIDROC EUROPE

7.4
Model SP7000
Retrievable Sand Probe
For The High Pressure Two Inch Access Fitting System

The Model SP7000 sand probes are used to detect erosion in flow lines caused by abrasive particles such as sand. One end of the probe is attached to a tee-type, high pressure access fitting with a solid plug by means of a sand probe nut. The other end is sealed, thin walled tube placed within the process stream to be exposed to particulate flowing through the system. (To minimise the effects of corrosion and thus more accurately detect erosion with the stream, the exposed element is made of stainless steel).

As particulates suspended in the process flow impact the surface of the sensing element, a hole is eventually eroded through the element. Once penetration has occurred, the system pressure then travels up the tube, into the access fitting body, and through a nipple and valve to a pressure gauge assembly. The pressure gauge shows that the element has been breached.

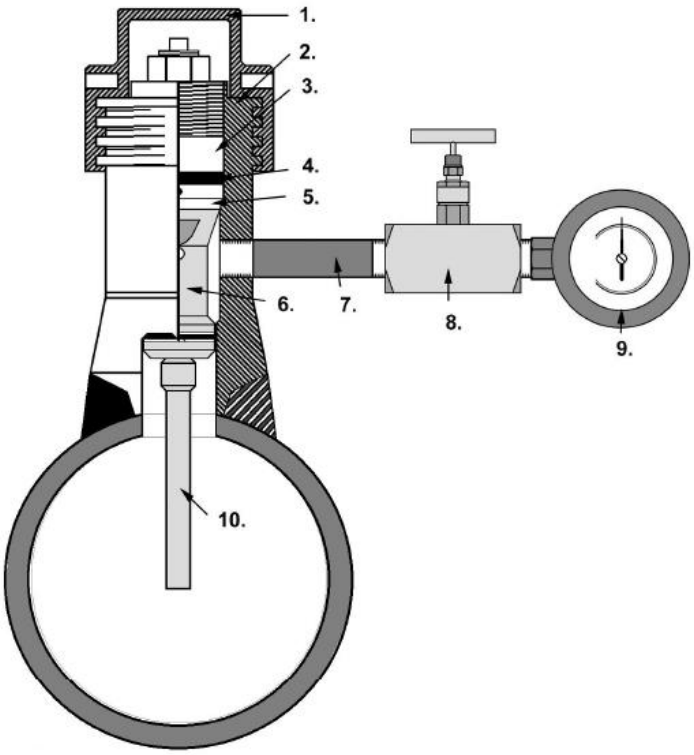

Picture is for illustrative purposes only, supplied product may differ

The components of the retrievable mechanical sand probe system are as follows:

1) Access fitting cover
2) Access fitting body
3) Solid plug assembly
4) Solid Plug O-ring
5) Solid Plug Primary Packing
6) Sand Probe Nut
7) 100mm TBE NPT Pipe Nipple
8) Shut Off Valve
9) Pressure Gauge
10) Sand Probe

Other designs are available, access fitting may be flanged type, threaded tee or flanged tee, with valve to suit.

The minimum order length for the sand probe is 3.75inch, up to any length in quarter inch increments.

If required, electronic pressure sensors (supplied by others) can be connected in place of the pressure gauge. These would enable alarm systems to signal the exact moment when failure occurs, to ensure early detection.

Specifications:	
Probe Body	Stainless Steel
Temperature Rating	260°C / 500°F
Pressure Rating	3600psi / 245 Bar
Mounting	2 inch Access System with Solid Plug
¼ inch NPT Pressure Gauge Product Code:	700743

A DIVISION OF BAC CORROSION CONTROL
RCSL (A TRADING DIVISION OF BAC CORROSION CONTROL LTD)
STAFFORD PARK 11, TELFORD, SHROPSHIRE, TF3 3AY
T : +44 (0) 1952 290321 E : sales@rcslgroup.com W: www.rcslgroup.com
MEMBER OF MIDROC EUROPE

Model SP7000
Retrievable Sand Probe

For The High Pressure Two Inch Access Fitting System

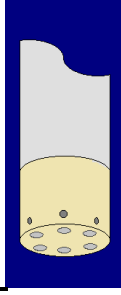

Model SP7000 Ordering Product Code Generation					
SP	Sand Probe for 2 inch Access Systems				
	Mounting Material				
	2	316			
	4	C276			
	U	Duplex 2205			
		Tube Material			
		2	316		
		4	C276		
		U	Duplex 2205		
			Tube Wall Thickness		
			1	0.016 inch	
			2	0.028 inch	
			3	0.035 inch	
				Order Length (rounded down to previous ¼ inch increment)	
				XXXX	Order length to 2 decimal points. Example shown is 6.25 inch
SP	**2**	**2**	**1**	**0625**	**Example of Probe Ordering Product Code**

Shut Off Valve Product Code: 70032X-X-X			
70032	**X**	**X**	**X**
	Access Fitting NPT Tee Size	Valve Pressure Rating	Material Code
	2 = ¼"	**1 = 6,000psi**	**1 = 316 S/S**
	3 = ½"	2 = 10,000psi	2 = 230M07 Carbon Steel
	4 = ¾"		3 = Monel 400
	5 = 1"		4 = C276
			5 = UNS S31803
			6 = UNS S32750
			7 = UNS S32760
			8 = UNS N06625
			9 = UNS N08825
			Z = Other (Please Specify)

100mm NPT TBE Pipe Nipple Product Code: 7000XX-X-X			
7000XX		**X**	**X**
NPT Nipple Size		Wall Schedule	Material Code
¼"	**700018**	**1 = 80**	**1 = 316 S/S**
½"	700019	2 = 160	2 = Carbon Steel (Please Specify)
¾"	700020	Z = Other (Please specify)	3 = UNS S31803 / UNS S32205
1"	700021		4 = UNS S32750
Note: Not all material, size and schedule combinations are available.			5 = UNS S32760
			6 = UNS N06625
			7 = UNS N08825
			Z = Other (Please Specify)

Notes:
Standard nipple and valve product codes are shown in **bold**.
Different pressure gauge or thread adaptor is required for nipple and valve sizes other than ¼"
For alloys, sizes, or other special requirements not listed, please contact our sales department.

A DIVISION OF BAC CORROSION CONTROL
RCSL (A TRADING DIVISION OF BAC CORROSION CONTROL LTD)
STAFFORD PARK 11, TELFORD, SHROPSHIRE, TF3 3AY
T : +44 (0) 1952 290321 E : sales@rcslgroup.com W: www.rcslgroup.com
MEMBER OF MIDROC EUROPE

8.0
Catch Pot Corrosion & Sampling Trap

Sub-Section No.

8.1
Catch Pot Corrosion Monitoring & Sampling Trap

Catch Pots provide a removable corrosion monitoring station, mounted to the pipe via a suitable valve, with multiple mounting points for direct mount corrosion monitoring products to give a Corrosion Monitoring Trap.

Corrosion Monitoring Traps are important in multi-phase systems where corrosion does not occur uniformly through the pipe.

Corrosion Monitoring Traps allow simulation of areas where water may condense from the process gas, where water may gather at low points in the line and where water may form a trapped wet sludge.

To monitor such situations using conventional corrosion monitoring systems is difficult if not impossible. The Corrosion monitoring trap allows this, thus providing a “worst case” corrosion monitoring scenario.

Catch Pots are be manufactured in customer’s requested materials of construction, dimensions, quantity of mounting thredolets and flange rating.

The example shown has multiple FNPT thredolets for corrosion monitoring products, typically there would be 3 thredolets plus an additional thredolet at the base for a suitable shut off valve for draining

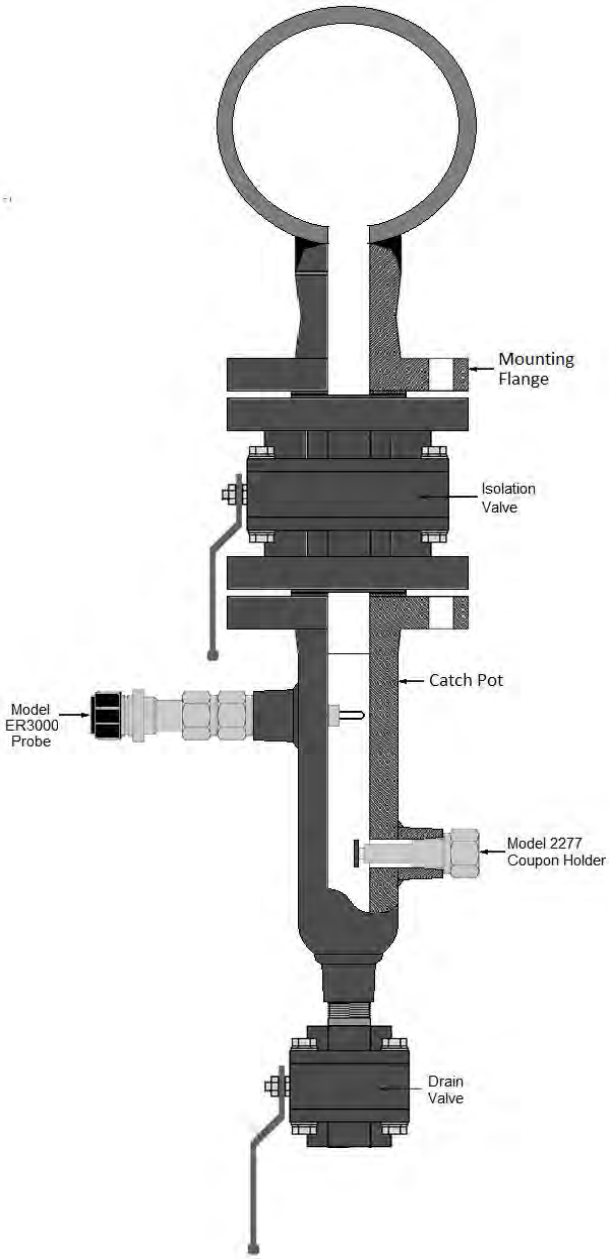

Typical Accessories:

Isolation Valve*
Model 2277 Disc Coupon Holder
Model FC6100 Bio Probe Holder
Model ER3000 Electrical Resistance Probe
Model LP3000 LPR Probe
Drain / Sampling Valve*
*Single Isolation Or Double Block and Bleed Valves are available

The ER and LPR probes can be connected to permanently installed Data Transmitters or Data-Loggers, or readings can be taken periodically using hand held portable instruments.

The Catch Pot is custom designed for each application, with flange rating, materials of construction, number and size of thredolets and valve design to suit the specific application. Please contact our sales department for further information.

A DIVISION OF BAC CORROSION CONTROL
RCSL (A TRADING DIVISION OF BAC CORROSION CONTROL LTD)
STAFFORD PARK 11, TELFORD, SHROPSHIRE, TF3 3AY
T : +44 (0) 1952 290321 E : sales@rcslgroup.com W: www.rcslgroup.com
MEMBER OF MIDROC EUROPE

9.0
Information & Calculation Sheets

Sub-Section No.

9.1
DNV Design Verification Report

RCSL's Triseal Two Inch Access Fitting System Design was reviewed by DET Norske Veritas' London project Approval Centre.

The Design Verification Report of their independent review is attached.

A DIVISION OF BAC CORROSION CONTROL
RCSL (A TRADING DIVISION OF BAC CORROSION CONTROL LTD)
STAFFORD PARK 11, TELFORD, SHROPSHIRE, TF3 3AY
T : +44 (0) 1952 290321 E : sales@rcslgroup.com W: www.rcslgroup.com
MEMBER OF MIDROC EUROPE

DET NORSKE VERITAS

DESIGN VERIFICATION REPORT

(Independent Review Certificate)

Manufacturer : Rose Corrosion Services Ltd

Equipment : Assorted 2" pipe access fitting system components as noted below.

Body, A/F – Flarweld, C/W ½" Sch 160 Flg. Tee
Body, A/F – 2" ANSI RF C/W ½" Sch 160 Flg. Tee
Body, A/F – Flarweld
Body, A/F – Buttweld
Body, A/F – Buttweld, C/W ½" Sch Flg. Tee
Body, A/F – 2" ANSI RJ
Body, A/F – 2" ANSI RJ, C/W ½" Sch 160 Flg. Tee
Body, A/F – 2" ANSI RF

This is to certify that the design of the above noted equipment has been reviewed and found to comply with:

- ASME B31.3 2006 Chemical Plant and Petroleum Refinery Piping
- Essential Safety Requirements of the Pressure Equipment Directive 97/23/EC, as defined in Appendix A attached.

The following design codes/standards were used as reference:

- API RP 14E Recommended Practice for Design and Installation of Offshore Production Platform Piping System
- ASME / ANSI B16.5 Pipe Flanges and Flanged Fittings
- NACE MR-01-75 Sulfide Stress Cracking Resistant – Metallic Materials for Oilfield Equipment

The design verification is given subject to the following limitations:

- Maximum working pressure of 6,000 psig
- Design temperature range for ASTM A350 LF2 material is -50°F to +500°F *
- Design temperature range for all other listed materials is -20°F to +500°F *
- Sour service (H_2S), except where noted
- No permanent jointing

* Note: the minimum temperature may be limited by the Particular Material Appraisals (refer to 7.5 of appendix).

The design verification is given for manufacture of the components from any of the following materials:

- AISI 1022
- ASTM A105
- ASTM A350 LF2
- ASTM A182 Grades 304, 316 and 316L
- ASTM A790 Duplex (UNS S31803 and S32304)
- ASTM B381 Grade F2 (not sour service)
- ASTM B348 Grade F2 (not sour service)
- UNS 32750
- UNS 32760
- ASTM A694

The following Rose Corrosion Services drawings formed the basis of review (all initial issues, no revision number):

Number	Document Title	Dated
SK5002	Body, A/F – Flarweld, C/W ½" Sch 160 Flg. Tee	5/2/93
SK5701	Body, A/F – 2" ANSI RF C/W ½" Sch 160 Flg. Tee	5/2/93
SK5001	Body, A/F – Flarweld	5/2/93
SK5100	Body, A/F – Buttweld	5/2/93
SK5101	Body, A/F – Buttweld, C/W ½" Sch Flg. Tee	5/2/93
SK5600	Body, A/F – 2" ANSI RJ	5/2/93
SK5601	Body, A/F – 2" ANSI RJ, C/W ½" Sch 160 Flg. Tee	5/2/93
SK5700	Body, A/F – 2" ANSI RF	5/2/93

Comments:

Compliance with the conformity assessment process required under PED for equipment of which these fittings form a part should not be inferred from this certificate alone.

DET NORSKE VERITAS
LONDON PROJECT APPROVAL CENTRE
LONDON – 01/04/10

JOHN YATES
Senior Principal Engineer

DET NORSKE VERITAS 1864 London

DAVID SHAW
Review Engineer

9.2
Order Length Calculations For Retrievable Products

Please use the listed calculations to obtain the order lengths for our products.

Should any assistance be required please contact our Sales Department.

Length Calculations For Retrievable Strip Coupon Holders (HC1**-****)

The calculated length should be rounded to the previous 0.125inch manufacturing length increment.

Flare-weld fittings

Intrusive at Entry Point
FH + WG + WT – (2.5 + ½EL)

Centre of Line
FH + WG + (PD/2) – (2.5 + ½EL)

Bottom of line (¼" gap)
FH + WG + PD – (0.25 + 2.5 + WT + EL)

Customer specified intrusion length
FH + WG + WT + IL – (2.5 + EL)

Flanged fittings

Intrusive at Entry Point
FH + FG + MF + WG + WT – (2.5 + ½EL)

Centre of Line
FH + FG + MF + WG + (PD/2) – (2.5 + ½EL)

Bottom of line (¼" gap)
FH + FG + MF + WG + PD – (0.25 + 2.5 + WT + EL)

Customer specified intrusion length
FH + FG + MF + WG + WT + IL – (2.5 + EL)

FH = Fitting Height
WG = Weld Gap (if not included in mating flange height). Usually estimated at 0.0625inch.
FG = Flange Gap. Usually estimated at 0.0625inch.
MF = Mating Flange Height From Pipe Outside Diameter (may be referred to as "nozzle stand-off").
WT = Wall Thickness
PD = Pipe Outside Diameter
0.25 = Gap from tip of coupon to opposite pipe wall
2.5 = Calculation constant
EL = Coupon Effective Length
"3inch" Strip Coupon = 1.625inch
"6inch" Strip Coupon = 4.75inch
IL = Intrusion Length

A DIVISION OF BAC CORROSION CONTROL
RCSL (A TRADING DIVISION OF BAC CORROSION CONTROL LTD)
STAFFORD PARK 11, TELFORD, SHROPSHIRE, TF3 3AY
T : +44 (0) 1952 290321 E : sales@rcslgroup.com W: www.rcslgroup.com
MEMBER OF MIDROC EUROPE

Length Calculations For Retrievable Ladder (2inch Strip) Coupon Holders (HC2**-****)

The calculated length should be rounded to the previous 0.125inch manufacturing length increment.

Flare-weld fittings

Flush to the line
Not available

Centre of Line
FH + WG + (PD/2) – 2.5

Bottom of line (¼" gap)
FH + WG + PD – (0.25 + 2.5 + WT)

Customer specified intrusion length
FH + WG + WT + IL – 2.5

Flanged fittings

Flush to the line
Not available

Centre of Line
FH + FG + MF + WG + (PD/2) – 2.5

Bottom of line (¼" gap)
FH + FG + MF + WG + PD – (0.25 + 2.5 + WT)

Customer specified intrusion length
FH + FG + MF + WG + WT + IL – 2.5

FH = Fitting Height
WG = Weld Gap (if not included in mating flange height). Usually estimated at 0.0625inch
FG = Flange Gap. Usually estimated at 0.0625inch
MF = Mating Flange Height from pipe outside diameter (may be referred to as "nozzle stand-off")
WT = Wall Thickness
PD = Pipe Diameter (Outside)
0.25 = Gap from tip of coupon to opposite pipe wall
2.5 = Calculation constant
IL = Intrusion Length

Note:
The ladder coupon holder is designed to hold 3 pairs of 2inch strip coupons (total 6 coupons). These would be at the top, centre and bottom of the pipe. Therefore RCSL will require detail of the application to provide a correctly designed coupon holder.

RCSL can supply ladder coupon holders suitable to hold other quantities of coupons if required.

Note that due to space restrictions within the pipe it may not be possible to fit 3 pairs of coupons. The main guide is as follows:

≤4inch Pipes	= 1 pair of coupons	
6inch Pipe	= 2 pairs of coupons	
≥8inch Pipe	= ≥3 pairs of coupons	*[Subject to pipe internal diameter]*

RCSL (A TRADING DIVISION OF BAC CORROSION CONTROL LTD)
STAFFORD PARK 11, TELFORD, SHROPSHIRE, TF3 3AY
T : +44 (0) 1952 290321 E : sales@rcslgroup.com W: www.rcslgroup.com

Length Calculations For Retrievable Flush Disc Coupon Holders (HC3**-****)

The calculated length should be rounded to the previous 0.125inch manufacturing length increment.

Flare-weld fittings

Intrusive at Entry Point
FH + WG + WT – 2.815

Centre of Line
FH + WG + (PD/2) – 2.815

Bottom of line (¼" gap)
FH + WG + PD – (W.T. + 3.125)

Customer specified intrusion length
FH + WG + WT + IL – 2.815

Flanged fittings

Intrusive at Entry Point
FH + FG + MF + WG + WT – 2.815

Centre of Line
FH + FG + MF + WG + (PD/2) – 2.815

Bottom of line (¼" gap)
FH + FG + MF + WG + PD – (W.T. + 3.125)

Customer specified intrusion length
FH + FG + MF + WG + WT + IL – (2.5 + EL)

FH = Fitting Height
WG = Weld Gap (if not included in mating flange height). Usually estimated at 0.0625inch.
FG = Flange Gap. Usually estimated at 0.0625inch.
MF = Mating Flange height from pipe outside diameter (may be referred to as "nozzle stand-off").
WT = Wall Thickness (Pipe)
PD = Pipe Diameter (Outside)
0.25 = Gap from tip of coupon to opposite pipe wall
2.815 = Calculation constant
3.125 = Calculation constant
IL = Intrusion Length

A DIVISION OF BAC CORROSION CONTROL
RCSL (A TRADING DIVISION OF BAC CORROSION CONTROL LTD)
STAFFORD PARK 11, TELFORD, SHROPSHIRE, TF3 3AY
T : +44 (0) 1952 290321 E : sales@rcslgroup.com W: www.rcslgroup.com
MEMBER OF MIDROC EUROPE

Length Calculations For Retrievable Flush Disc Coupon Holders (HC4**-****)

The length formulas are as per the calculations for standard retrievable fixed length flush disc coupon holder (HC3**-****).

The adjustment range of the adjustable length flush disc coupon holder is 1inch. Therefore it is suggested that the required length is calculated and then 0.5inch is subtracted from the result, in order that the required length is roughly central within the adjustment range.

The calculated length should be rounded to the previous 0.25inch manufacturing length increment.

The minimum order length for adjustable length flush disc coupon holder is 2.5inch.

Please contact RCSL should assistance be required.

RCSL (A TRADING DIVISION OF BAC CORROSION CONTROL LTD)
STAFFORD PARK 11, TELFORD, SHROPSHIRE, TF3 3AY
T : +44 (0) 1952 290321 E : sales@rcslgroup.com W: www.rcslgroup.com

Length Calculations For Retrievable Multiple Disc Coupon Holders (HC5**-****)

The calculated length should be rounded to the previous 0.125inch manufacturing length increment.

Flare-weld fittings

Flush to the line
Not available

Centre of Line
FH + WG + (PD/2) – 2

Bottom of line (¼" gap)
FH + WG + PD – (0.25 + 2.5 + WT)

Customer specified intrusion length
FH + WG + WT + IL – 2

Flanged fittings

Flush to the line
Not available

Centre of Line
FH + FG + MF + WG + (PD/2) – 2

Bottom of line (¼" gap)
FH + FG + MF + WG + PD – (0.25 + 2.5 + WT)

Customer specified intrusion length
FH + FG + MF + WG + WT + IL – 2

FH = Fitting Height
WG = Weld Gap (if not included in mating flange height). Usually estimated at 0.0625inch
FG = Flange Gap. Usually estimated at 0.0625inch
MF = Mating Flange Height from pipe outside diameter (may be referred to as "nozzle stand-off")
WT = Wall Thickness
PD = Pipe Diameter (Outside)
0.25 = Gap from tip of coupon to opposite pipe wall
2 = Calculation constant
2.5 = Calculation constant
IL = Intrusion Length

Note:
The multiple disc holder is designed to hold 3 pairs of disc coupons. These would be at the top, centre and bottom of the pipe. Therefore RCSL will require detail of the application to provide a correctly designed coupon holder.

RCSL can supply multiple disc holders suitable to hold other quantities of coupons if required.

Note that due to space restrictions within the pipe it may not be possible to fit 3 coupons. The main guide is as follows:

≤3inch Pipes	= 2 coupons
4inch Pipe	= 3 coupons
≥6inch Pipe	= ≥3 coupons

RCSL (A TRADING DIVISION OF BAC CORROSION CONTROL LTD)
STAFFORD PARK 11, TELFORD, SHROPSHIRE, TF3 3AY
T : +44 (0) 1952 290321 E : sales@rcslgroup.com W: www.rcslgroup.com

Length Calculations For Other Retrievable Coupon Holders

Please contact RCSL

RCSL (A TRADING DIVISION OF BAC CORROSION CONTROL LTD)
STAFFORD PARK 11, TELFORD, SHROPSHIRE, TF3 3AY
T : +44 (0) 1952 290321 E : sales@rcslgroup.com W: www.rcslgroup.com

Length Calculations for Retrievable ER Probes.

The calculated length should be rounded to the previous 0.125inch manufacturing length increment.

Flare-weld fittings

Flush to the line
FH – 5.25 + 1.75 + WG + WT

Centre of Line
FH – 5.25 + 1.75 + WG + (PD/2) *[please see note regarding probe elements]*

Bottom of line (¼" gap)
FH – 5.25 + 1.75 + WG + PD – WT – 0.25

Customer specified intrusion length
FH – 5.25 + 1.75 + WG + WT + IL

Flanged fittings

Flush to the line
FH – 5.25 + 1.75 + FG + MF + WG + WT

Centre of Line
FH – 5.25 + 1.75 + FG + MF + WG + (PD/2) *[please see note regarding probe elements]*

Bottom of line (¼" gap)
FH – 5.25 + 1.75 + FG + MF + WG + PD – (WT + 0.25)

Customer specified intrusion length
FH – 5.25 + 1.75 + FG + MF + WG + WT + IL

FH = Fitting Height
5.25 = Calculation constant
1.75 = Calculation constant
WG = Weld Gap (if not included in mating flange height). Usually estimated at 0.0625inch.
FG = Flange Gap. Usually estimated at 0.0625inch.
MF = Mating Flange height from pipe outside diameter (may be referred to as "nozzle stand-off").
WT = Wall Thickness
PD = Pipe outside Diameter
0.25 = Gap from tip of probe element to opposite pipe wall
IL = Intrusion Length

Notes:
RCSL considers it best practice for centre of the line applications that the probe element straddles the pipe centre line, therefore we would recommend that ½ the element length is added on to the calculated length where possible.

The probe element lengths are specified on the relevant data sheets.

For pipes of 4inch diameter and less please check that the probe element can straddle the pipe centre line without contacting the opposite pipe wall should the pipe internal diameter be insufficient.

Please review the individual probe data sheets for details of the minimum probe lengths.
Please contact RCSL if the required length is less than the minimum probe length.

A DIVISION OF BAC CORROSION CONTROL
RCSL (A TRADING DIVISION OF BAC CORROSION CONTROL LTD)
STAFFORD PARK 11, TELFORD, SHROPSHIRE, TF3 3AY
T : +44 (0) 1952 290321 E : sales@rcslgroup.com W: www.rcslgroup.com
MEMBER OF MIDROC EUROPE

Length Calculations for Retrievable 2 Electrode LPR Probes.

The calculated length should be rounded to the previous 0.125inch manufacturing length increment.

Flare-weld fittings

Flush to the line
Not available

Intrusive at Entry
FH – 5.25 + 1.75 + WG + WT + 1.25

Centre of Line
FH – 5.25 + 1.75 + WG + (PD/2) *[please see note regarding probe electrodes]*

Bottom of line (¼" gap)
FH – 5.25 + 1.75 + WG + PD – (WT + 0.25)

Customer specified intrusion length
FH – 5.25 + 1.75 + WG + WT + IL

Flanged fittings

Flush to the line
Not available

Intrusive at Entry
FH – 5.25 + 1.75 + FG + MF + WG + WT + 1.25

Centre of Line
FH – 5.25 + 1.75 + FG + MF + WG + (PD/2) *[please see note regarding probe electrodes]*

Bottom of line (¼" gap)
FH – 5.25 + 1.75 + FG + MF + WG + PD – (WT + 0.25)

Customer specified intrusion length
FH – 5.25 + 1.75 + FG + MF + WG + WT + IL

FH = Fitting Height
5.25 = Calculation constant
1.75 = Calculation constant
1.25 = Electrode Length
WG = Weld Gap (if not included in mating flange height). Usually estimated at 0.0625inch.
FG = Flange Gap. Usually estimated at 0.0625inch.
MF = Mating Flange height from pipe outside diameter (may be referred to as "nozzle stand-off").
WT = Wall Thickness
PD = Pipe outside Diameter
0.25 = Gap from tip of probe element to opposite pipe wall
IL = Intrusion Length

Notes:
The probes utilise electrodes that are 1.25inch long. RCSL considers it best practice for centre of the line applications that the electrodes straddle the pipe centre line, therefore we would recommend that ½ the electrode length is added on to the calculated length where possible.

Please review the individual probe data sheets for details of the minimum probe length.

Please contact RCSL if the required length is less than the minimum probe length.

RCSL (A TRADING DIVISION OF BAC CORROSION CONTROL LTD)
STAFFORD PARK 11, TELFORD, SHROPSHIRE, TF3 3AY
T : +44 (0) 1952 290321 E : sales@rcslgroup.com W: www.rcslgroup.com

Length Calculations for Retrievable 3 Electrode LPR Probes.

Note that the calculated lengths do not include the probe electrode length. Please see the note regarding the probe electrode length.

The calculated length should be rounded to the previous 0.125inch manufacturing length increment.

Flare-weld fittings

Flush to the line
Not available

Intrusive at Entry
FH – 5.25 + 1.75 + WG + WT

Centre of Line
FH – 5.25 + 1.75 + WG + (PD/2) – LPEL *[Please see note regarding centre of the line]*

Bottom of line (¼" gap)
FH – 5.25 + 1.75 + WG + PD – (WT + 0.25 + LPEL)

Customer specified intrusion length
FH – 5.25 + 1.75 + WG + WT + IL – LPEL

Flanged fittings

Flush to the line
Not available

Intrusive at Entry
FH – 5.25 + 1.75 + FG + MF + WG + WT

Centre of Line
FH – 5.25 + 1.75 + FG + MF + WG + (PD/2) – LPEL *[Please see note regarding centre of the line]*
Bottom of line (¼" gap)
FH – 5.25 + 1.75 + FG + MF + WG + PD – (WT + 0.25 LPEL)

Customer specified intrusion length
FH – 5.25 + 1.75 + FG + MF + WG + WT + IL – LPEL

FH = Fitting Height
5.25 = Calculation constant
1.75 = Calculation constant
1.25 = Electrode Length
WG = Weld Gap (if not included in mating flange height). Usually estimated at 0.0625inch.
FG = Flange Gap. Usually estimated at 0.0625inch.
MF = Mating Flange height from pipe outside diameter (may be referred to as "nozzle stand-off").
WT = Wall Thickness
PD = Pipe outside Diameter
LPEL = LPR Probe Electrode Length
0.25 = Gap from tip of probe element to opposite pipe wall
IL = Intrusion Length

Notes:
The probes electrodes are of different lengths subject to the material. Please review the electrode lengths and ensure that the electrode will fit within the pipe bore.

RCSL considers it best practice for centre of the line applications that the electrodes straddle the pipe centre line, therefore we would recommend that ½ the electrode length is added on to the calculated length where possible.

Please review the individual probe data sheets for details of the minimum probe length.

Please contact RCSL if the required length is less than the minimum probe length.

RCSL (A TRADING DIVISION OF BAC CORROSION CONTROL LTD)
STAFFORD PARK 11, TELFORD, SHROPSHIRE, TF3 3AY
T : +44 (0) 1952 290321 E : sales@rcslgroup.com W: www.rcslgroup.com

Length Calculations for Retrievable Flush Electrode LPR Probes.

The calculated length should be rounded to the previous 0.125inch manufacturing length increment.

Flare-weld fittings

Flush to the line
FH – 5.25 + 1.75 + WG + WT

Centre of Line
FH – 5.25 + 1.75 + WG + (PD/2)

Bottom of line (¼" gap)
FH – 5.25 + 1.75 + WG + PD – (WT + 0.25)

Customer specified intrusion length
FH – 5.25 + 1.75 + WG + WT + IL

Flanged fittings

Flush to the line
FH – 5.25 + 1.75 + FG + MF + WG + WT

Centre of Line
FH – 5.25 + 1.75 + FG + MF + WG + (PD/2)

Bottom of line (¼" gap)
FH – 5.25 + 1.75 + FG + MF + WG + PD – (WT + 0.25)

Customer specified intrusion length
FH – 5.25 + 1.75 + FG + MF + WG + WT + IL

FH = Fitting Height
5.25 = Calculation constant
1.75 = Calculation constant
WG = Weld Gap (if not included in mating flange height). Usually estimated at 0.0625inch.
FG = Flange Gap. Usually estimated at 0.0625inch.
MF = Mating Flange height from pipe outside diameter (may be referred to as "nozzle stand-off").
WT = Wall Thickness
PD = Pipe outside Diameter
0.25 = Gap from tip of probe element to opposite pipe wall
IL = Intrusion Length

Notes:
It is recommended that the flush LPR probe is used for flush to the line applications only.

Please review the individual probe data sheets for details of the minimum probe length.

Please contact RCSL if the required length is less than the minimum probe length.

A DIVISION OF BAC CORROSION CONTROL
RCSL (A TRADING DIVISION OF BAC CORROSION CONTROL LTD)
STAFFORD PARK 11, TELFORD, SHROPSHIRE, TF3 3AY
T : +44 (0) 1952 290321 E : sales@rcslgroup.com W: www.rcslgroup.com
MEMBER OF MIDROC EUROPE

Length Calculations for Retrievable Hydrogen Probes

The calculated length should be rounded to the previous 1inch manufacturing length increment.

Please see note regarding minimum probe length

Flare-weld fittings

Flush to the line
Not available due to minimum probe length

Centre of Line
FH – 5.25 + 1.75 + WG + (PD/2)

Bottom of line (¼" gap)
FH – 5.25 + 1.75 + WG + PD – WT – 0.25

Customer specified intrusion length
FH – 5.25 + 1.75 + WG + WT + IL

Flanged fittings

Flush to the line
FH – 5.25 + 1.75 + FG + MF + WG + WT

Centre of Line
FH – 5.25 + 1.75 + FG + MF + WG + (PD/2)

Bottom of line (¼" gap)
FH – 5.25 + 1.75 + FG + MF + WG + PD – (WT + 0.25)

Customer specified intrusion length
FH – 5.25 + 1.75 + FG + MF + WG + WT + IL

FH = Fitting Height
5.25 = Calculation constant
1.75 = Calculation constant
WG = Weld Gap (if not included in mating flange height). Usually estimated at 0.0625inch.
FG = Flange Gap. Usually estimated at 0.0625inch.
MF = Mating Flange height from pipe outside diameter (may be referred to as "nozzle stand-off").
WT = Wall Thickness
PD = Pipe outside Diameter
IL = Intrusion Length
0.25 = Gap from tip of probe element to opposite pipe wall

Notes:
The hydrogen probe has a minimum order length of 6inch.
Please contact RCSL if the required length is less than the minimum probe length.

RCSL (A TRADING DIVISION OF BAC CORROSION CONTROL LTD)
STAFFORD PARK 11, TELFORD, SHROPSHIRE, TF3 3AY
T : +44 (0) 1952 290321 E : sales@rcslgroup.com W: www.rcslgroup.com

Length Calculations for Retrievable Sand Probes

The calculated length should be rounded to the previous 0.25inch manufacturing length increment.

Flare-weld fittings

Flush to the line
Not available

Centre of Line
FH + WG + (PD/2) – (2.04 + N)

Bottom of line (¼" gap)
FH + WG + PD – (WT + 0.25 + 2.04 + N)

Customer specified intrusion length
FH + WG + WT + IL – (2.04 + N)

Flanged fittings

Flush to the line
Not available

Centre of Line
FH + FG + MF + WG + (PD/2) – (2.04 + N)

Bottom of line (¼" gap)
FH + FG + MF + WG + PD – (WT + 0.25 + 2.04 + N)

Customer specified intrusion length
FH + FG + MF + WG + WT + IL – (2.04 + N)

FH = Fitting Height
WG = Weld Gap (if not included in mating flange height). Usually estimated at 0.0625inch.
FG = Flange Gap. Usually estimated at 0.0625inch.
MF = Mating Flange height from pipe outside diameter (may be referred to as "nozzle stand-off").
WT = Wall Thickness
PD = Pipe outside Diameter
IL = Intrusion Length
0.25 = Gap from tip of probe to opposite pipe wall
2.04 = Calculation constant
N = Sand Nut Length

Notes:
The sand probe has a minimum order length of 3.75inch.
Please contact RCSL if the required length is less than the minimum probe length.

A DIVISION OF BAC CORROSION CONTROL
RCSL (A TRADING DIVISION OF BAC CORROSION CONTROL LTD)
STAFFORD PARK 11, TELFORD, SHROPSHIRE, TF3 3AY
T : +44 (0) 1952 290321 E : sales@rcslgroup.com W: www.rcslgroup.com
MEMBER OF MIDROC EUROPE

Length Calculations for Retrievable Bio Probes

The calculated length should be rounded to the previous 0.125inch manufacturing length increment.

Flare-weld fittings:

Flush to the line
(FH+WG+WT) - (2.5”) = OL

Opposite Pipe Wall (not recommended)
(FH+WG+PD) - (2.5”+WT+0.25”) = OL

Flanged fitting:

Flush to the line
(FH+WG+FG+MF+WT) - (2.5”) = OL

Opposite Pipe Wall (not recommended)
(FH+WG+FG+MF+PD) - (2.5”+WT+0.25”) = OL

FH = Fitting Height
WG = Weld Gap (if not included in mating flange height). Usually estimated at 0.0625inch.
FG = Flange Gap. Usually estimated at 0.0625inch.
MF = Mating Flange height from pipe outside diameter (may be referred to as “nozzle stand-off”).
WT = Wall Thickness
PD = Pipe outside Diameter
IL = Intrusion Length
OL = Overall Length including the 1” Delrin

RCSL (A TRADING DIVISION OF BAC CORROSION CONTROL LTD)
STAFFORD PARK 11, TELFORD, SHROPSHIRE, TF3 3AY
T : +44 (0) 1952 290321 E : sales@rcslgroup.com W: www.rcslgroup.com

Length Calculations for Chemical Injection

Flush - Non Flange Access Fitting
X Open: (FH + PW) – (2.04 + N) = L
X NPT: (FH + PW) – (3.353 + N) = L

Flush - Flange Access Fitting
X Open: (FH + PW + MF) – (2.04 + N) = L

Top of Line - Non Flange Fitting
X Open (FH + PW + IL) – (2.04 + N) = L
X NPT: (FH + PW + IL) – (2.04 + N) = L
X Quill: (FH + PW + IL) – (2.04 + N) = L

Top of Line - Flange Fitting
X Open (FH + PW + IL + MF) – (2.04 + N) = L
X NPT: (FH + PW + IL + MF) – (3.363 + N) = L
X Quill: (FH + PW + IL + MF) – (2.04 + N) = L

Centre of Line - Non Flange Fitting
X Quill: (FH + PD/2) – (2.04 + N) = L
X Head: (FH + PD/2) – (2.04 + N) = L

Centre of Line - Flange Fitting
X Quill: (FH + PD/2 + MF) – (2.04 + N) = L

Bottom of Line - Non Flange Fitting
X Open: (FH + PD) – (2.04 + N + PW)=L

Bottom of Line - Flange Fitting
X Open: (FH + PD + MF) – (2.04 + N + PW) = L

FH = Access Fitting Height
PW = Pipe Wall Thickness
N = Injection Nut Length
L = Injection Tube Length
MF = Mating Flange Height
IL = Insertion Length into Pipe or Vessel
PD = Pipe Outside Diameter

A DIVISION OF BAC CORROSION CONTROL
RCSL (A TRADING DIVISION OF BAC CORROSION CONTROL LTD)
STAFFORD PARK 11, TELFORD, SHROPSHIRE, TF3 3AY
T : +44 (0) 1952 290321 E : sales@rcslgroup.com W: www.rcslgroup.com
MEMBER OF MIDROC EUROPE

9.3
Seals and O-Rings

Temperature Range	Material	Product Code
-45° to +176°C -50° to +350°F	"O" Ring, Viton	700600
	Primary Packing	700266
Steam to: + 250°C 450°F	"O" Ring, Ethylene Propylene	700139
	Primary Packing, Vespel	700773
+176 to +260°C +350° to +500°F	"O" Ring, Kalrez or Chemraz	700680
	Silicone	700601
	Primary Packing, Vespel	700733
In Excess of 287°C 500°F	Primary Packing, Nitronic 60 Do not use "O" rings at these temperature.	700284

Other seal materials are available, please ask our sales department.

RCSL (A TRADING DIVISION OF BAC CORROSION CONTROL LTD)
STAFFORD PARK 11, TELFORD, SHROPSHIRE, TF3 3AY
T : +44 (0) 1952 290321 E : sales@rcslgroup.com W: www.rcslgroup.com